CAMISANI-CALZOLARI, F.R., CRAIG, I.K., and PISTORIUS, P.C. Defect and mould variable prediction in continuous casting. *Application of Computers and Operations Research in the Minerals Industries,* South African Institute of Mining and Metallurgy, 2003.

Defect and mould variable prediction in continuous casting

F.R. CAMISANI-CALZOLARI*, I.K. CRAIG*, and P.C. PISTORIUS†
*Department of Electrical, Electronic and Computer Engineering, University of Pretoria, Pretoria, South Africa
†Department of Materials Science and Metallurgical Engineering, University of Pretoria, Pretoria, South Africa

Defects which occur at the surface of a continuously cast slab impede the throughput of final product, because an extra stage in the process is required to grind the defects away before further processing can take place. Defect prediction and the minimization of the occurrence of defects is required. The use of two models to define the defect propagation is explained. Both models are derived using system identification techniques such as auto-regression with exogenous input (ARX). One model is used to determine the effect of manipulated variables such as casting speed and measured disturbances such as mould level on temperatures within the mould. The other is used to determine or indicate the effect of the mould temperatures on the occurrence of defects such as transversal cracks. The latter model can be used to predict when the defects will occur and the former can be used to control the occurrence of the defects.

Keywords: continuous casting, surface defect, control system, predictor, system identification, ARX

Introduction

The continuous casting process forms part of steel-making and is the predominant method for the solidification of molten steel into large blocks known as slabs. The primary extraction of energy from the molten steel takes place in the mould of the continuous caster. This phase of solidification is considered to be instrumental in the genesis of defects that are present at the surface of the cast product (see e.g. Graebe *et al.*[1]).

The defects that occur are detected by human operators only after the slab has cooled down enough after casting has been completed-several hours after casting commenced. This is a necessary step because defects can cause serious product quality problems and have to be removed. The surface of the slab is grinded to remove any surface defects that may occur, and is inspected once again to ensure that deep-lying defects are not present. If further defects are present, the slab is spot grinded to remove these deep-lying defects.

The net effect is that grinding causes a very long delay between the completion of casting and further processing such as rolling.

If the grinding phase can be excluded from the global process, then hot charging (Wiesinger *et al.*[2] and Holleis *et al.*[3]) or direct rolling become possible.

During hot charging, the cast product is sent for rolling before the slab cools off below 650°C (Wiesinger *et al.*[2]); thus reducing the time required for re-heating of the slab before it can be rolled and minimizing the cost of energy required.

For direct rolling, the casting process and slab scheduling is optimized to such an extent that the slabs are directly sent for rolling, thus eliminating the energy and time required at the re-heating furnace. Direct rolling is, however, impossible if the extent of surface defects is so severe that post-casting treatment (i.e. grinding) of the slab is required. The grinding treatment cannot be done at the elevated temperatures which are required for hot rolling (*circa* 1150°C [Wiesinger *et al.*[2]]) and thus the throughput of the product is reduced due to the time required to cool, treat and reheat the cast slab. The cost of energy consumed in the reheating furnace also implies unnecessary financial losses.

If hot charging (rather than direct rolling) is practised, surface treatment does not appear to imply as great a loss, since some reheating is required whether surface treatment is applied or not. However, the time that surface treatment takes implies a reduction in throughput.

The need for higher throughput of cast product has prompted the authors to investigate the possibility of using control system techniques to reduce or even eradicate the occurrence of defects. Once defects have been eliminated, direct rolling may become possible, because the intermediate step of grinding is eliminated.

This paper presents results based on the use of system identification techniques as a modelling tool to predict and control the occurrence of defects.

A brief overview of the process will be given, and the main fundamentals of system identification utilised here will be explained. A model structure has been defined and will be repeated. The application of system identification to derive a predictor model and a mould model will be perused, and results of the models will be shown to verify that the model can be used. Finally, some conclusions will be given.

Background

The following sub-sections are necessary to understand the process at hand.

Process

The pre-treatment of steel involves melting of iron together

with catalysts, removal of chemical elements such as sulphur and addition/removal of elements such as carbon. The steel is heated to high temperatures to effect the right composition of the steel grade that is desired by the customer.

The steel must be presented in solid form at room temperature to the client, either as solidified slabs (typically 200 mm thick, 1000 to 1600 mm wide and 5000 to 12000 mm long) or rolled plate. To present the solid steel to the client, the molten steel must first be cooled. The continuous casting process is used to achieve this goal in almost all steel-making plants in the world.

The steel arrives in its molten state at the caster in a container known as a ladle (see Figure 1).

The ladle feeds a tundish through constant flow and the tundish feeds the mould in turn through constant flow. The addition of an extra steel container (tundish) is primarily to achieve the 'continuity' of the process so that when a ladle is empty, the tundish still has some steel left and can continue the casting process in the mould without interruption.

The mould is the most vital component of the process and is said to be the initiator of most defects. It is an open-ended, water-cooled, copper-sheath and extracts the most energy from the molten steel during the casting process. As steel moves down the mould it solidifies*, ensuring that at the bottom of the (typically 1 m long) mould there is a thick enough solid shell of steel to withstand ferro-static pressures of the liquid steel contained within. Once out of the mould, the strand is cooled over approximately five metres by water sprays impinging directly on the surface of the strand. As the strand moves out of the water-spray area, it is cut and sent for further processing to grinders and then to rolling mills or directly to the customer after it has cooled appropriately.

*To prevent sticking, the mould oscillates at low frequency and stroke to aid the removal of the strand

Defects

Typical surface defects that may occur are cracks, either transversally (Mintz *et al.*[5]) or longitudinally (Brimacombe *et al.*[6], Kim *et al.*[7], Moiseev *et al.*[8], Nakajima *et al.*[9]) to the direction of casting, and inclusions (Bouris and Bergeles[10]) of non-metallic elements such as the lubricating powder that is used to aid in the reduction of friction between the copper mould wall and steel surface. Other defects that occur are depressions (non-rectangular form of the slab, Thomas *et al.*[11]) and oscillation marks (King *et al.*[12], Spaccarotella *et al.*[13]) due to the oscillating motion of the mould and bleeder (Kumar *et al.*[14]) marks due to temporary 'welding' of the steel surface to the copper sheath.

Further explanation of the characteristics and formation of defects will be excluded here but can be found in the referenced texts above.

General model

As stated in the introduction, the need has arisen to be able to detect and control the occurrence of defects in the continuous casting process. This can be achieved using input/output modelling in which monitored or controlled variables* in the process are the inputs and the defects are the outputs. Due to the genesis of defects within the mould, only input variables within the mould will be considered. Other variables (such as secondary cooling zone spray patterns) act as disturbances on the system (Camisani-Calzolari *et al.*[4]). A graphical representation of the input/output model structure with these facts taken into consideration is given in Figure 2.

The inputs consist of manipulated variables, measured and unmeasured disturbances and variables which do not fall within either of the mentioned categories. The controlled inputs consist of casting speed and the frequency of oscillation of the mould. Disturbances which can be measured are the level of liquid metal in the mould and the

*Such as the speed at which casting takes place

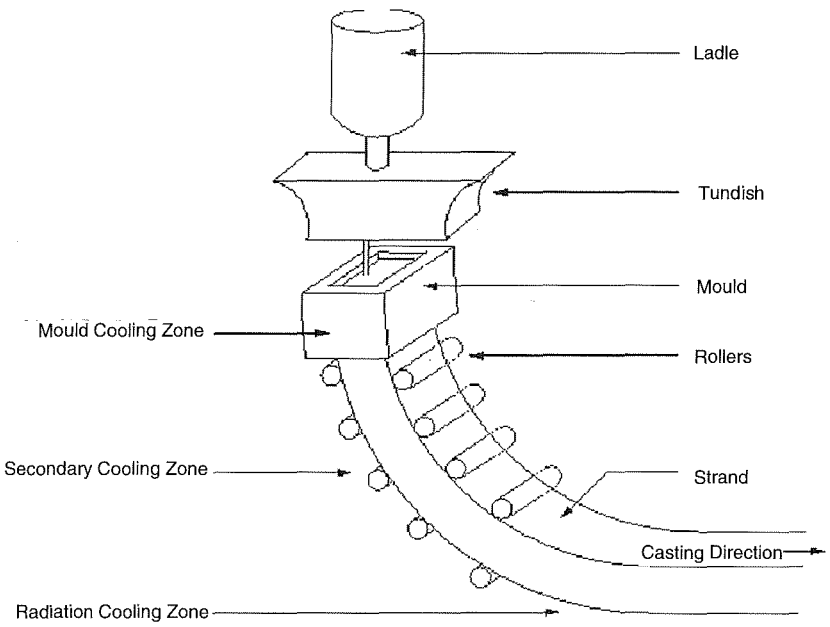

Figure 1. The bow-type continuous caster. Adapted from Camisani-Calzolari *et al.*[4]

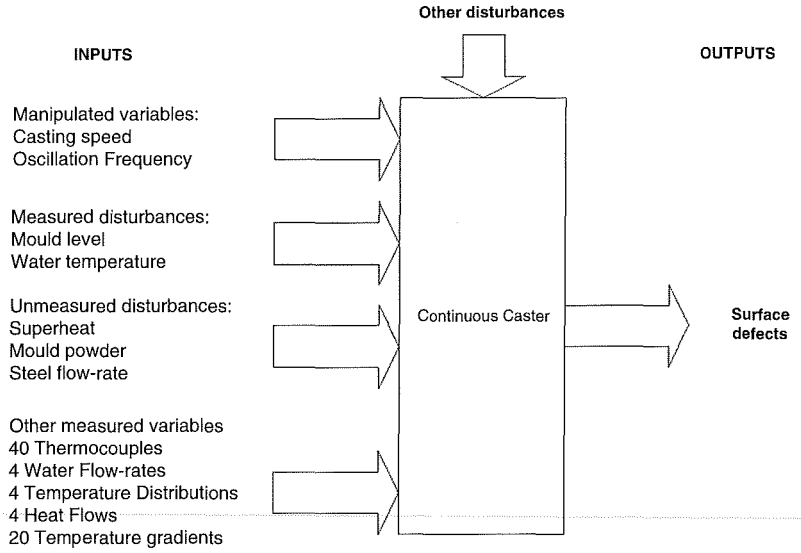

Figure 2. General model for the continuous casting process

temperature of the circulating water within the mould plates. Disturbances which are unmeasured are e.g. the temperature above liquidus temperature of the incoming steel (superheat), the addition of mould powder which acts as a lubricant at the copper-steel interface and rate of steel inflow at the mould entrance. Other measured variables include the measurement of temperature by thermocouples within the mould. The flow rate in each of the four copper faces, as well as overall temperature distributions and heat flux also fall within this category. Taking all these variables into consideration materializes into approximately 80 input variables.

The defects (outputs) are sub-categorized into defects that occur on top or at the bottom of the slab; left, centre and right locations on the slab; and before and after grinding.

Such a model (predictor) will undoubtedly consist of a very large number of variables. It is necessary to check which variables truly define the (dynamic) characteristics of defect formation. Some input variables may be strongly correlated to other input variables. This implies that one of the input variables may be discarded from the model structure. Secondly, some input variables may have no influence on the output variables (defects). These inputs may then also be discarded. The procedure for the elimination is discussed by Camisani-Calzolari *et al.*[4]. The result is that the model contains far less input variables, and this implies that the global model of Figure 2 can be broken down into two separate models (also see Camisani-Calzolari *et al.*[16] and Camisani-Calzolari *et al.*[17]). The model structure is shown in Figure 3.

The first model (manipulated variable [MV] to intermediate variable [IV]) has casting speed as an input- and mould level and water temperature as measured disturbances—and the thermocouples as outputs. The second model (intermediate variable to output variable [OV]) has the thermocouples as inputs and the defects as outputs.

The reduction is very useful, because defects can be eliminated by applying feedback control on the MV to IV loop, once the optimal temperature set-points have been calculated using the IV to OV model.

System identification

After the model structure has been defined, the models have to be derived. The modelling procedure for this process from first principles involves microstructure analysis of e.g. crack formation and is indeed a tedious process. Therefore, empirical methods together with a computer can be used to train models.

There have been several successful attempts at designing defect predictors using artificial neural networks on computer systems (see e.g. Hatanaka *et al.*[15]). However, such models are only beneficial to be used as predictors and cannot be used for control systems design, due to their black-box nature. Other methods, based on Box-Jenkins (Box *et al.*[18]) models, also deliver fine results. These are commonly known in control systems as system identification methods.

Background

In this work, auto regressive with exogenous input (ARX, see Ljung[19]) model structures were used to train both the MV to IV and IV to OV models. In the ARX realization, historical data of inputs and outputs are used to train regressors of a model as follows.

The input data of m inputs sampled every T seconds (n is an index) are grouped into a vector of inputs as $\boldsymbol{u}[nT]=(u_1[nT]\ u_2[nT]\ \ldots\ u_m[nT])^T$ and similarly the p outputs are grouped as $\boldsymbol{y}[nT]=(y_1[nT]\ y_2[nT]\ \ldots\ y_m[nT])^T$. The structure of the ARX model is then given by

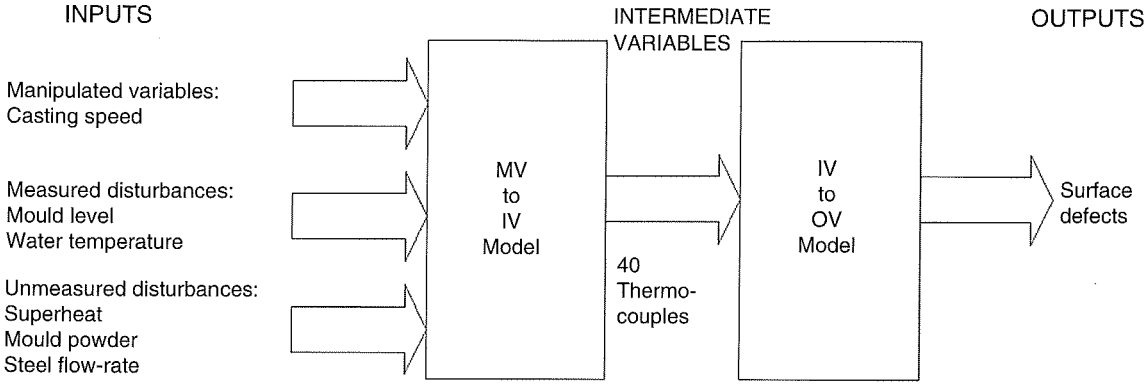

Figure 3. Two model description of the process

$$\mathbf{A}_o\mathbf{y}[nT]+\mathbf{A}_1\mathbf{y}[(n-1)T]+\ldots+\mathbf{A}_{n_a}\mathbf{y}[(n-n_a)T] = \mathbf{B}_o\mathbf{u}[nT]+\mathbf{B}_1\mathbf{u}[(n-1)T]+\ldots+\mathbf{B}_{n_a}\mathbf{u}[(n-n_b+1)T], \quad [1]$$

where $\mathbf{A}_v \forall\ v = 1,2,\ldots,n_a$ are the output regressors of the form

$$\mathbf{A}_v = \begin{bmatrix} a_{1,1}^{(v)} & a_{1,2}^{(v)} & \cdots & a_{1,p}^{(v)} \\ a_{2,1}^{(v)} & a_{2,2}^{(v)} & \cdots & a_{2,p}^{(v)} \\ \vdots & \vdots & \ddots & \vdots \\ a_{p,1}^{(v)} & a_{p,2}^{(v)} & \cdots & a_{p,1}^{(v)} \end{bmatrix}, \quad [2]$$

and $B_w \forall\ w = 1,2,\ldots,n_b$ are the input regressors of the form

$$B_w = \begin{bmatrix} b_{1,1}^{(w)} & b_{1,2}^{(w)} & \cdots & b_{1,m}^{(w)} \\ b_{2,1}^{(w)} & b_{2,2}^{(w)} & \cdots & b_{2,m}^{(w)} \\ \vdots & \vdots & \ddots & \vdots \\ b_{p,1}^{(w)} & b_{p,2}^{(w)} & \cdots & b_{p,m}^{(w)} \end{bmatrix}. \quad [3]$$

The regressors have to be found using data from a plant. To achieve this, N data points of input and output data are used in a minimization by least squares. The input/output data of one sample are grouped into a vector as follows (assuming that $\mathbf{A}_o$ is an identity matrix because no current output is weighted or has any influence on any other output):1

$$\psi[nT] = \begin{bmatrix} -y[(n-1)T] \\ -y[(n-2)T] \\ \vdots \\ -y[(n-n_a)T] \\ u[nT] \\ u[(n-1)T] \\ u[(n-2)T] \\ \vdots \\ u[(n-n_b+1)T] \end{bmatrix} \quad [4]$$

and the the regressors are lumped as follows:

$$\Theta = \left[\mathbf{A}_1 \cdots \mathbf{A}_{n_a}\mathbf{B}_o\mathbf{B}_1 \cdots \mathbf{B}_{n_b-1}\right]^T. \quad [5]$$

This allows for the system of Equation [1] to be written as

$$\mathbf{y}[nT] = \Theta^T\psi[nT], \quad [6]$$

for one data point. Since N data points will be used in the regression, this fact has to be worked into the least squares. Define an output vector as

$$Y[nT] = \begin{bmatrix} y^T[nT] \\ y^T[(n+1)T] \\ y^T[(n+2)T] \\ \vdots \\ y^T[(n+N-1)T] \end{bmatrix}^T, \quad [7]$$

and data matrix as

$$\psi[nT] = \begin{bmatrix} \Psi^T[nT] \\ \psi^T[(n+1)T] \\ \psi^T[(n+2)T] \\ \vdots \\ \psi^T[(n+N-1)T] \end{bmatrix}^T. \quad [8]$$

The system can now be written as $\mathbf{Y}[nT] = \Theta^T\Psi[nT]$ and will be regarded as an average model for all data points that were used in the regression. An estimate of the outputs based on the regression (Θ) will be given by $\hat{\mathbf{Y}}[nT,\hat{\Theta}] = \Theta^T\Psi[nT]$, where $\hat{\mathbf{Y}}[nT,\hat{\Theta}]$ is the estimated values of the outputs, based on some specific Θ, and on past data values, $\Psi[nT]$. To determine the estimate of the predictor, an error between the true outputs, $\mathbf{Y}[nT]$, and the predicted outputs, $\hat{\mathbf{Y}}[nT,\hat{\Theta}]$, is defined as

$$\Xi\left[nT,\hat{\Theta}\right] = \mathbf{Y}[nT] - \hat{\mathbf{Y}}\left[nT,\hat{\Theta}\right]. \quad [9]$$

The least square error of $\Xi[nT,\hat{\Theta}]$ is then given by $V(\hat{\Theta}) = \frac{1}{2}\|\Xi[nT,\hat{\Theta}]\|_F^2$. This expression is differentiated with respect to $\hat{\Theta}$ and set equal to zero to find the least squares estimate $\hat{\Theta}$ The result is that the best estimator (in a least squares sense) of the outputs based on the data is given by

$$\hat{\Theta} = \left[\Psi[nT]\Psi^T[nT]\right]^{-1}\Psi[nT]\mathbf{Y}^T[nT]. \quad [10]$$

A computer can (must) be used to perform the above calculation which requires three matrix multiplications, two matrix transposes and one matrix inverse.

Model training and validation

In this study, data collected over a 6-month period amounting to about 1.25 gigabyte of disc storage space was used.

For the MV to IV model, three inputs (one manipulated variable [casting speed] and two measured disturbances [mould level and water temperature]) and 38 outputs (thermocouples*) were used. Thus, m=3 and p=38. Furthermore, the amount of regressors were chosen such that the model gave adequate results. This was achieved when n_a=1 and n_b=1 (first order response). Several amounts of data points were used, depending on the width of the slab for which the data was trained (e.g. for 1060 mm wide slabs, N=4437 time points were used for training and N=2412 for validation [testing of model on data not used for training]).

For the IV to MV model, 38 inputs (thermocouples) were used as well as 108 defects outputs (nine defects; located at the top and bottom; left, centre and right; and before or after grinding [9 x 2 x 3 x 2 = 108]). Thus, m=38 and p=108. The model structure was chosen with n_a=5 and n_b=4 to deliver the most accurate fit.

Using MATLAB with a personal computer together with the data, adequate models were obtained of both systems. For the MV to IV model, the data was split into two, with two-thirds of the data being used for training of the model and one-third for the validation of the model.

Figure 4 shows the model versus true plant output for a thermocouple temperature known as in1u on the *training set* of data.

The fit is good by control systems standards and the noise that can be observed from the Figure is due to measurement noise and unmeasured disturbances acting in on the system.

Figure 5 shows the model and true plant output for another thermocouple, nr1u (of the MV to IV model) using the *validation data*. There is also a lot of noise that can be observed, and this should be due to unmeasured disturbances.

Figure 6 shows the model and true plant output for a transversal crack occurring on the top left portion of the slab only visible after grinding has taken place, i.e. a portion of the IV to OV model. Note that there is a distinct relationship (through casting speed) between the time of the occurrence of a defect and the position of occurrence along the slab. The model does not follow the occurring defect (at time t=7500 seconds). This is due to the high non-linearity in the system. The question as to whether a defect has occurred or has not, can be answered by applying a threshold above which a defect occurs and below which a defect does not occur. This can also circumvent the noise that is present in the model signal. Note that the ordinate axis has the *severity of the defect* as a unit.

Figure 7 shows the model and true plant outputs for longitudinal cracking using plant validation data collected three years after the training set of data was collected. The predictor is currently running at the plant. The model output data has been thresholded and as can be seen, predicts that a defect will occur in the region where true defects do occur. In the region where a defect is predicted but where a defect does not occur is known as a false alarm. This is minimal in this case. Comparable results for longitudinal cracking can be found in the work of Hunter *et al.*[20], where artificial neural networks are used as the predictor. The paper reports a *sensitivity* (number of correct defect predictions versus number of defect points present) of 61.5% and *specificity*

*Two thermocouples out of the 40 were defective during the data gathering period

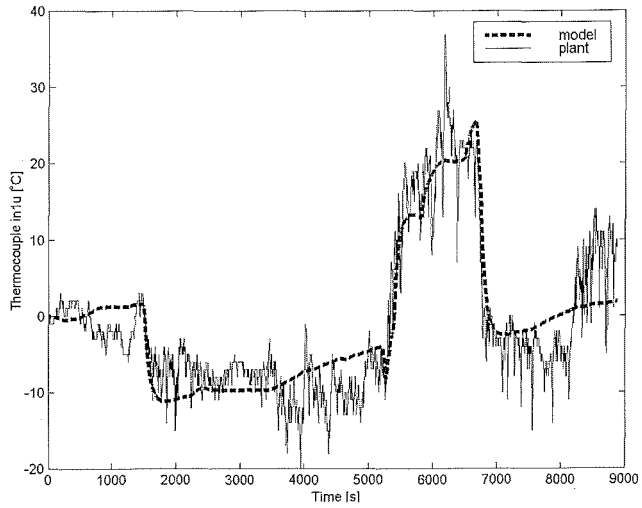

Figure 4. Model and true plant output of the MV to IV model for output thermocouple in1u

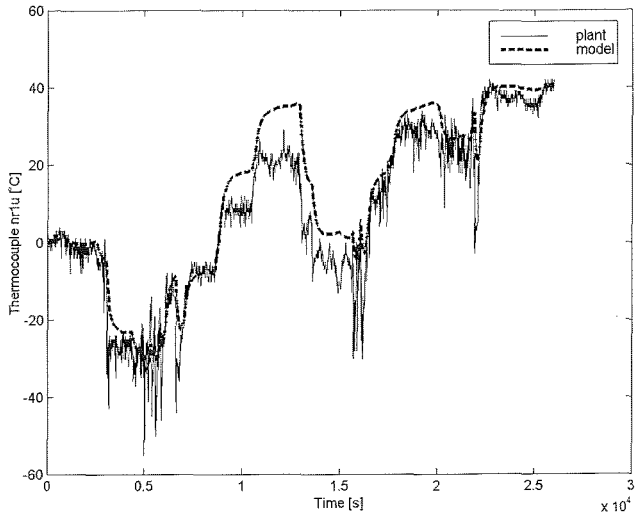

Figure 5. Model and true plant output of the MV to IV model for output thermocouple nl2l

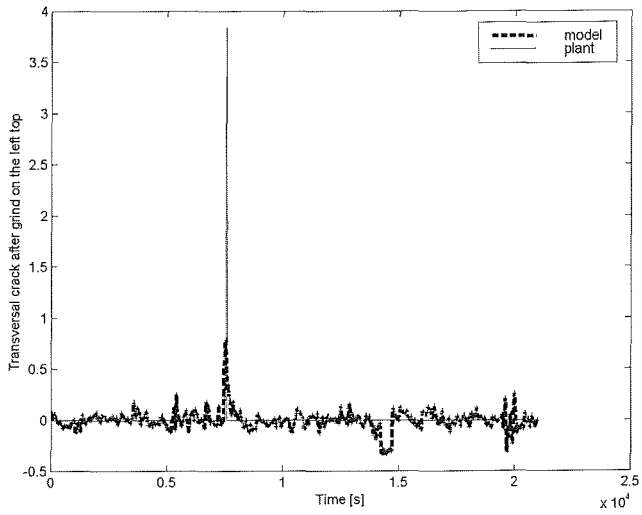

Figure 6. Model and plant outputs for the IV to OV model for a transversal crack occurring after grinding on the top left of the slab surface

(number of correct non-defect prediction points versus number of true non-defect points) of 75% on validation data. The results using the ARX predictor gives a sensitivity value of 63.6% and specificity value of 93.5%. The ARX predictor is therefore marginally better in predicting defects and has much fewer false alarms. No published literature could be found regarding the accuracy of predictors of other defects. The ARX predictor has a sensitivity of 73.4% for transversal cracking, 8.8% for casting powder entrapment, 24.8% for other inclusions, 14.4% for bleeders, 42.3% for deep oscillation marks, 66.3% for uneven oscillation marks, 41.3% for stopmarks and 44.8% for depressions. The inclusions are the worst performing defects, while transversal cracking, longitudinal cracking and uneven oscillation marks fare the best. The specificity for all the defects was more than 93%.

The resulting model ($\hat{\Theta}$) is too large to reproduce here.

Conclusions and future work

The preceding discussion has shown that the modelling principle of breaking the system model into two models is feasible and that both models deliver good results in terms of trend following of the system. This allows one to predict the defects and to understand the effect of manipulated variables on the system better.

The two models which have been derived can be utilized in future as follows. The IV to MV model can be used to determine (through an inverse problem) what the ideal values for the intermediate variables (IVs [thermocouple temperatures]) should be so that no defects occur. These temperatures then act as set-points for the MV to IV model by which controllers can be designed to control the mould system so that the temperatures are maintained. As a final comment, preliminary results have shown that the control action is marginal, mainly because there is only one actuator involved: casting speed. The need then arises to redesign the mould so that more controllability can be imported into the system so that better control results can be achieved. This can be accomplished by adding individually (flow) controlled water pockets in the mould, so that temperature can be controlled individually in more regions of the mould.

References

1. GRAEBE, S.F., GOODWIN, G.C., and ELSLEY, G. Control Design and Implementation in Continuous Steel Casting. *IEEE Control Systems Magazine*, August. 1995. pp. 64–71.
2. WIESINGER, H., HOLLEIS, G., SCHWAHA, K., and HIRSCHMANNER, F. Design of CC Machines for Hot Charging and Direct Rolling. *Continuous Casting*. Harabuchi, T.B. and Pehlke, R.D. (Eds). The Iron and Steel Society, Volume four. 1988. pp. 227–255.
3. HOLLEIS, G., BUMBERGER, H., FASTNER, T., HIRSCHMANNER, F., and SCHWAHA, K. Prerequisites for production of continuously cast semis for direct rolling and hot charging. *Continuous Casting* '85. 1985. pp. 46.1–46.7.
4. CAMISANI-CALZOLARI, F.R., CRAIG, I.K., and PISTORIUS, P.C. Control structure for the reduction of defects in continuous casting. *Proceedings 15th IFAC World Congress*, Paper T-Th-E12-3. Barcelona, Spain. 21–26 July, 2002.
5. MINTZ, B., YUE, S., and JONES, J.J. Hot ductility of steels and its relationship to the problem of transverse cracking during continuous casting. *International Materials Reviews*. vol. 36, no. 5. 1991. pp. 187–217.
6. BRIMACOMBE, J.K., WEINBERG, F., and HAWBOLT, E.B. Formation of Longitudinal, Midface Cracks in Continuously-Cast Slabs.

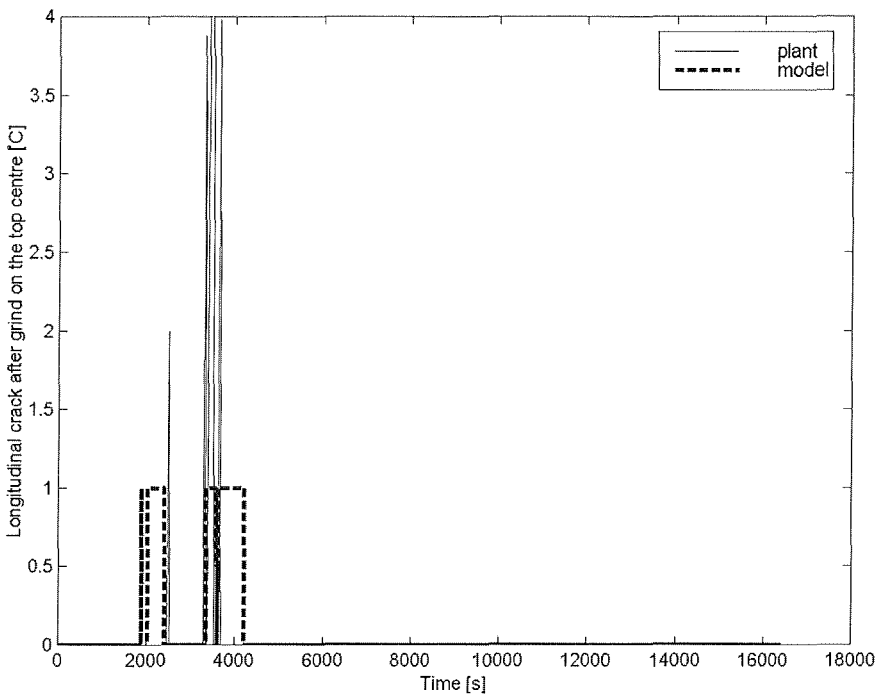

Figure 7. Model versus true plant output for the IV to OV model for the longitudinal crack defect occurring at the top after grinding at the centre

Metallurgical Transactions B. vol. 10. 1979. pp. 279–292.

7. KIM, K.-H., YEO, T.-J., OH, K.-H., and LEE, D.N. Effect of Carbon and Sulfur in Continuously Cast Strand on Longitudinal Surface Cracks. *ISIJ International*. vol. 36, no. 3. 1996. pp. 284–289.
8. MOISEEV, B.P., ESAULOV, V.S., NIKOLAEV, V.A., EMEL'YANOV, V.V., and GUBIN, N.I. Nature of longitudinal surface cracks in continuously cast slabs. *Steel in the USSR*. December, 1986. pp. 590–593.
9. NAKAJIMA, K., HIRAKI, S., KAWAMOTO, M. and KANAZAWA, T. Influence of Mold Heat Flux on Longitudinal Surface Cracks During High-Speed Continuous Casting of Steel Slab. *The Sumitomo Search*. May, 1994. pp. 32–39.
10. BOURIS, D. and BERGELES, G. Investigation of inclusion re-entainment from the steel-slag interface. *Metallurgical and Materials Transactions B*. vol. 29B. 1998. pp. 641–649.
11. THOMAS, B.G., MOITRA, A., and ZHU, H. Coupled thermo-mechanical model of solidifying steel shell applied to depression defects in continuous-cast slabs. *Proceedings Modelling of Casting, Welding and Advanced Solidification Processes VII*. M. Cross and J. Campbell (Eds). TMS. 1995. pp. 241–248.
12. KING, J.R., LACEY, A.A., PLEASE, C.P., WILLMOTT, P., and ZORYK, A. The formation of oscillation marks on continuously cast steel. *Mathematical Engineering in Industry*. vol. 4, no. 2. 1993. pp. 91–106.
13. SPACCAROTELLA, A., MORETTI, R., DI SCHINO, G., and PROVANTINI, G. Influence of mould oscillation and powder lubrication on surface quality of austenitic stainless steel slabs at Terni Works. *Continuous Casting '85*. 1985. pp. 42.1–42.11.
14. KUMAR, S., WALKER, B.N., SAMARASEKERA, I.V., and BRIMACOMBE, J.K. Chaos at the Meniscus—The genesis of defects in continuously cast steel billets. *13th PTD Conference Proceedings*. 1995. pp. 119–41.
15. HATANAKA, K., TANAKA, T., and KOMINAMI, H. Breakout forecasting system based on multiple neural networks for continuous casting in steel production. *Fujitsu Sci. Tech. J*. vol. 29. September, 1993. pp. 265–270.
16. CAMISANI-CALZOLARI, F.R., CRAIG, I.K., and PISTORIUS, P.C. A proposed control system, CAQC methodology and prediction system for the improvement of surface defects on the continuous casting of slabs. *Proceedings of the IFAC Workshop on Future Trends in Automation in Mineral and Metal Processing*. Finland. 2000. pp. 402–406.
17. CAMISANI-CALZOLARI, F.R., CRAIG, I.K., AND PISTORIUS, P.C. A Prediction System Based on System Identification Techniques for the Eradication of Surface Defects in the Continuous Casting of Slabs, *Proceedings of the 3rd International Conference on Control Theory and Applications*. December 12–14, 2001. Pretoria, South Africa. pp. 162–166.
18. BOX, G.E.P., JENKINS, G.M., and REINSEL, G.C. *Time series analysis-forecasting and control*. 3rd Edition. Prentice Hall. Englewood Cliffs. 1994.
19. LJUNG, L. *System Identification—Theory for the user*. Prentice Hall. Englewood Cliffs. 1987.
20. HUNTER, N.S., NORMANTON, A.S., SCOONES, D., SPACCAROTELLA, A., MILONE, M., VICINO, F., LAMANT, H., MORAND, H., and DO, T.P. The influence of mould metallurgy on surface defects in peritectic carbon and austenitic stainless steels. *La Revue de Metallurgie-CIT*. vol. 4. no. 6. (1999). pp. 473–482.