Development of permanent cathode technology and related lifecycle solutions

L. Nordlund and H.Virtanen
Outotec (Finland)

In today's highly competitive environment, everyone recognizes the importance of good tankhouse efficiency. A constant issue that concerns tankhouse personnel is the impact that the condition of permanent cathodes has on tankhouse performance. Tankhouse operations around the world have very different experiences with their permanent cathode lifetime. This variance is due largely to the maintenance philosophy at a particular tankhouse. We know from long experience that the lifetime of cathodes can be many years if they are well maintained. Properly maintaining cathodes is demonstrably a cost-effective way to maximize tankhouse efficiency.

Cathode maintenance predominantly involves the regular checking and replacing of damaged edge strips, followed by cathode straightening and cleaning of residual copper deposits (often a result of poor edge strip performance).

Edge strips typically need to be replaced every few years in a waxless process, and throughout the history of permanent cathode technology there have been many attempts to improve the edge strip performance by making prefabricated edge strips fit more tightly and seamlessly to the edges of the permanent cathodes. To date, these efforts have met with limited success.

Some recent developments have significantly improved the performance of edge strips, finally providing respite to the issue of frequent edge strip replacement. These developments have increased the average life of edge strips from a typical 1-2 years to more than 4 years of service interval per cathode, providing a considerable economic advantage.

Other worthwhile developments in cathode maintenance include automated maintenance processes, up to a level where maintenance equipment can be an integral part of the permanent cathode stripping machine.

Introduction

In the late 1990s Outokumpu Wenmec (later Outotec) started a project for breakthrough developments and advances in copper refining to assure Outokumpu's position as technology leader and a low-cost and safe producer. A full-scale copper refining pilot unit was built at Pori copper refinery, and development work lasted a number of years. As the result, several new innovations were made, including a new permanent cathode design. A number of different edge strips were tested, one of which was made by extruding and shaping thermoplastic material directly to the prepared edges of the stainless steel plate. This type of edge strip performed well, had excellent chemical and mechanical properties, and caused minimal disturbance to the flow of electrolyte (Virtanen, Marttila, and Pariani, 1999). This was the starting point for edge strip development work at Outotec.

Early in the past decade, commercial deliveries of the new edge strip began, and performance of the edge strips at clients' plants showed good results. However, the manufacturing process was still quite complex and demanding to control. It was decided to take this technology a step further and perfect the manufacturing processes. This so-called second-generation edge strip development project was started in 2007 and completed in 2010.

In this article we study the performance data and improvements over the first-generation edge strip technology.

Permanent cathode construction

Permanent cathodes for copper processes can be classified into following main categories (Marsden and Jickling, 2009) based on the construction of their hanger bars.

- Cathodes with copper-plated steel hanger bar. This is the traditional Xstrata ISA design (Figure 1). Stainless steel tube is welded to the cathode plate and then the tube is electroplated with few millimetres of copper
-

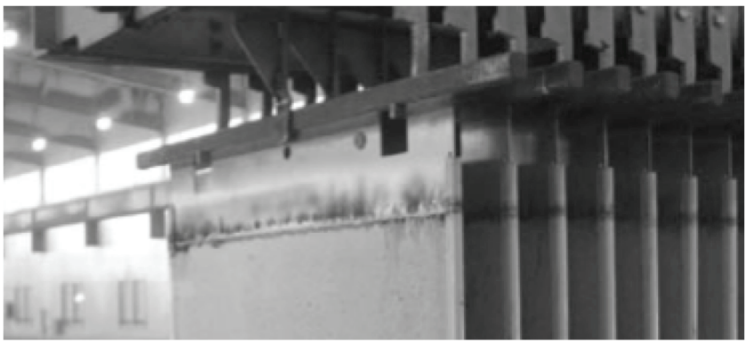

Figure 1. Xstrata ISA cathode

- Unsheathed cathode hanger bar. The cathode blank is welded directly to the copper hanger bar, using a dissimilar metal weld. Some fabricators use additives in the welding process that may subject the joint to additional corrosion
- Partially sheathed cathode hanger bar. This is a development of the unsheathed design. A thin stainless steel sheath is welded onto the centre portion of the cathode hanger bar and the end gaps between the copper and the stainless steel sheath are sealed either by welding, with chemical sealant, or with a mechanical sleeve (Figure 2). These designs are used by EPCM, Xstrata KIDD, as well as emerging Chinese companies.

Figure 2. Solid copper bar design with partial protection and Scheibler edge strips

- Fully sheathed cathode hanger bar. In this design the copper core is fully enclosed within a protective stainless tube (Figure 3). Outotec's fully sheathed design uses 3 mm thick rectangular tube. Only a minimum amount of copper is exposed at the contact point by machining away the steel as required by the busbar design. Laser welding of the hanger bar to the cathode plate is performed by robots. This design takes into account the challenge of dissolution of copper from hanger bar as well as the mechanical overloading and abrasion issue mentioned by Marsden and Jickling (2009).
  The number of Outotec permanent cathodes in service today exceeds 350 000 in more than 25 different customer plants.

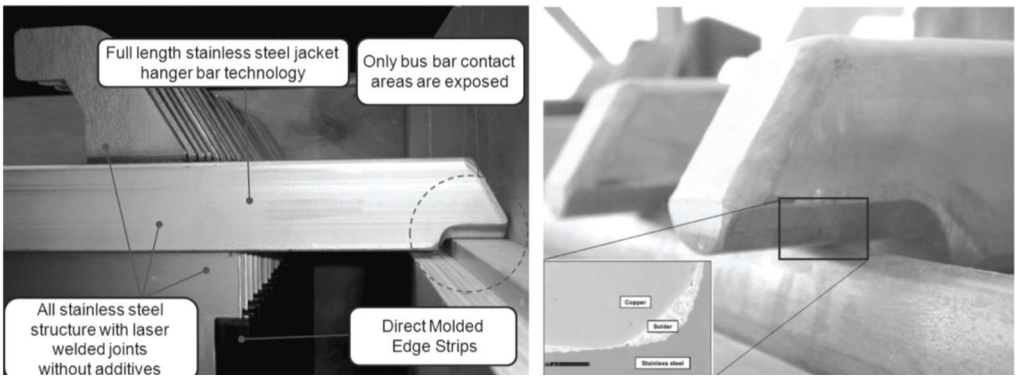

Figure 3. Full-length stainless steel tube corrosion-protected hanger bar

Edge strip development

Edge strips are necessary for permanent cathodes of all designs, and these are located on the vertical sides of the cathode blade. The purpose of the edge strips is to prevent deposited metal from growing around the cathode and to allow the cathode deposit to be removed in the stripping machine. During the metal stripping process the edge strips are subjected to mechanical forces tend to move or damage the edge strip. When this process is carried out repeatedly, electrolyte eventually penetrates between the edge strip and cathode plate surface causing damage to the edge strip that gradually becomes worse.

This tendency of edge strips to wear out prematurely has been a topic for discussion since the introduction of permanent cathode technology. Different mechanical edge strip geometries and materials have been tried, in addition to the use of wax, but to date attempts to extend the edge strip lifetime significantly have met with limited success.

The main topic in this article is the advancement of edge strip technology. Previous publications in this field include the results from multi-component plastic edge strips constructions (Alexander, 1997) and a material chart promoting the properties of plastics (Cutmore, 1997).

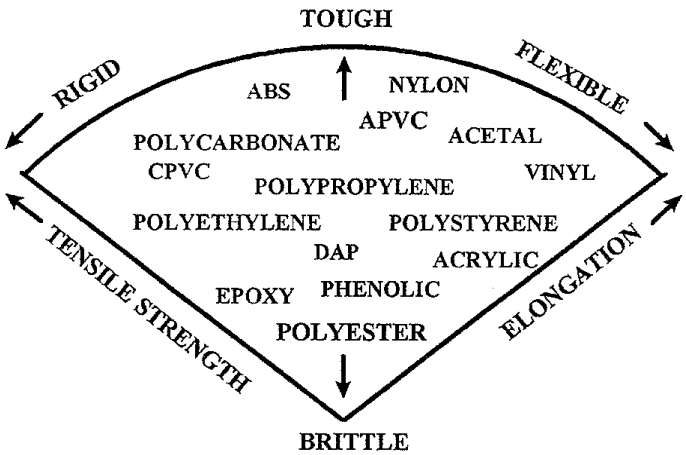

Figure 4. Edge strip material chart and properties. The materials in the top left corner are identified as preferable materials for edge strips (Cutmore, 1997)

For almost a decade the default material of Outotec's direct moulding edge strips was black high-density polyethylene, which has excellent elongation at break values and good chemical resistance.

A major advance was made when manufacturing technology evolved from atmospheric low-pressure extrusion technology (first generation) to high-pressure moulding technology (second generation). The entire manufacturing process and equipment was totally re-designed in-house. This development work was completed during 2008, and in 2009 the commercial manufacturing process was upgraded. Figure 5 shows a cathode with direct-moulded second-generation edge strips.

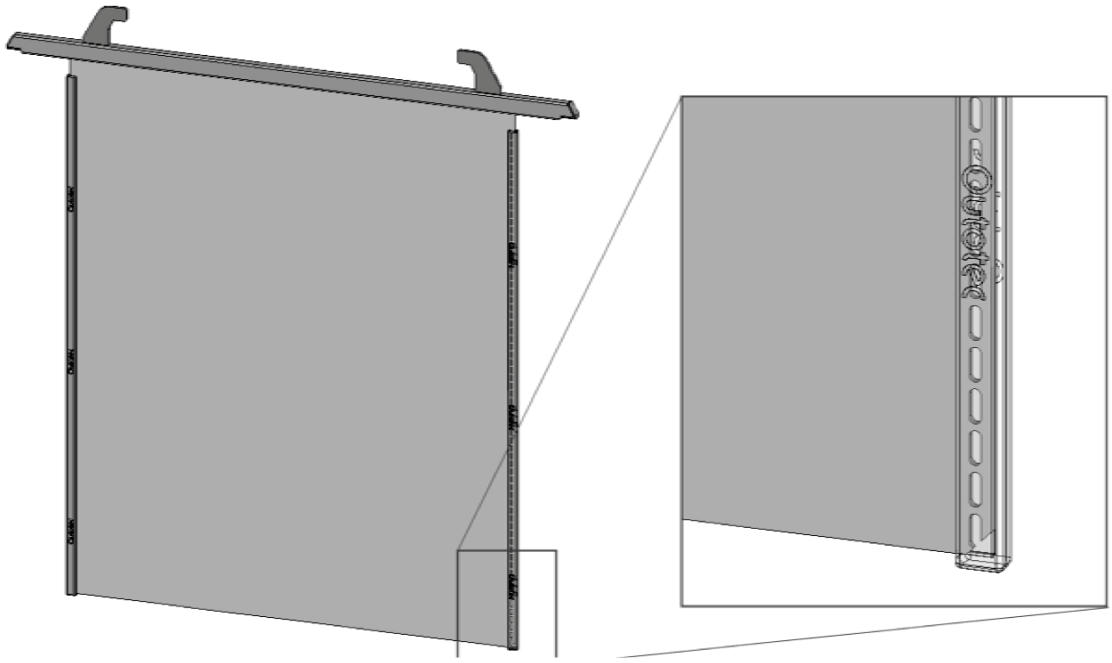

Figure 5. Direct-moulded second-generation edge strips

As a result of this development in the manufacturing process, the full range of commercially available plastics could now be used. Tests were conducted using a wide variety of materials: high-density polyethylene (HDPE), CPVC, polycarbonate, and ABS just to name a few. One modified polypropylene (PP) compound showed better performance even compared with ABS, and was selected as the fabrication material after extensive process trials.

Advancements over the first-generation edge strip technology were as follows:

Plastic properties:

- Higher heat deflection temperature (HDT)
- Higher tensile strength
- Higher flexural modulus
- Compromise in: elongation at break, impact strength.

Manufacturing:

- Fully automated process with robot production lines
- Controlled one-piece moulding geometry
- Controlled solidification phase
- Gapless joint to plate surface using single material
- Truly repeatable process
- No post-processing of edge strips after manufacturing.

Edge strip performance

The second-generation direct-moulded edge strip technology was first used at New Boliden Pori copper refinery at the beginning of 2009. Before this, first-generation edge strip technology had been in use.

Parallel testing of alternative materials was undertaken until both the research team and the client's plant personnel responsible for testing had developed sufficient confidence in the new material. In June 2010 the manufacturing transition was made to the modified grade of polypropylene, providing a significant improvement in thermal, tensile, and flexural properties over the previously-used HDPE.

Outotec has operated off-site cathode maintenance for the New Boliden Pori plant since early 2009. The cathode maintenance statistics for the past three-and-a-half years are presented in Table I and Figure 6. It is important to notice that the statistics are from permanent cathodes returned for all reasons, and no distinction has been made, for example, between cathodes with edge strip failures and mechanically bent plates.

Table I. Second-generation polypropylene edge strip adaption rate and cathode maintenance interval

	2010				2011				2012				2013			
Adaption rate / lifetime	Q1	Q2	Q3	Q4	Q1	Q2	Q3	Q4	Q1	Q2	Q3	Q4	Q1	Q2	Q3	Q4
2nd generation (white) PP edge strips	0 %	3 %	9 %	19 %	28 %	36 %	47 %	56 %	62 %	66 %	71 %	74 %	78 %	81 %		
1st / 2nd generation (black) HD-PE edge strips	100 %	97 %	91 %	81 %	72 %	64 %	53 %	44 %	38 %	34 %	29 %	26 %	22 %	19 %		
Average maintenance interval (years)	2,4	3,4	2,8	2,4	2,8	3,0	2,3	2,6	4,1	6,2	4,0	5,2	4,8	7,0		

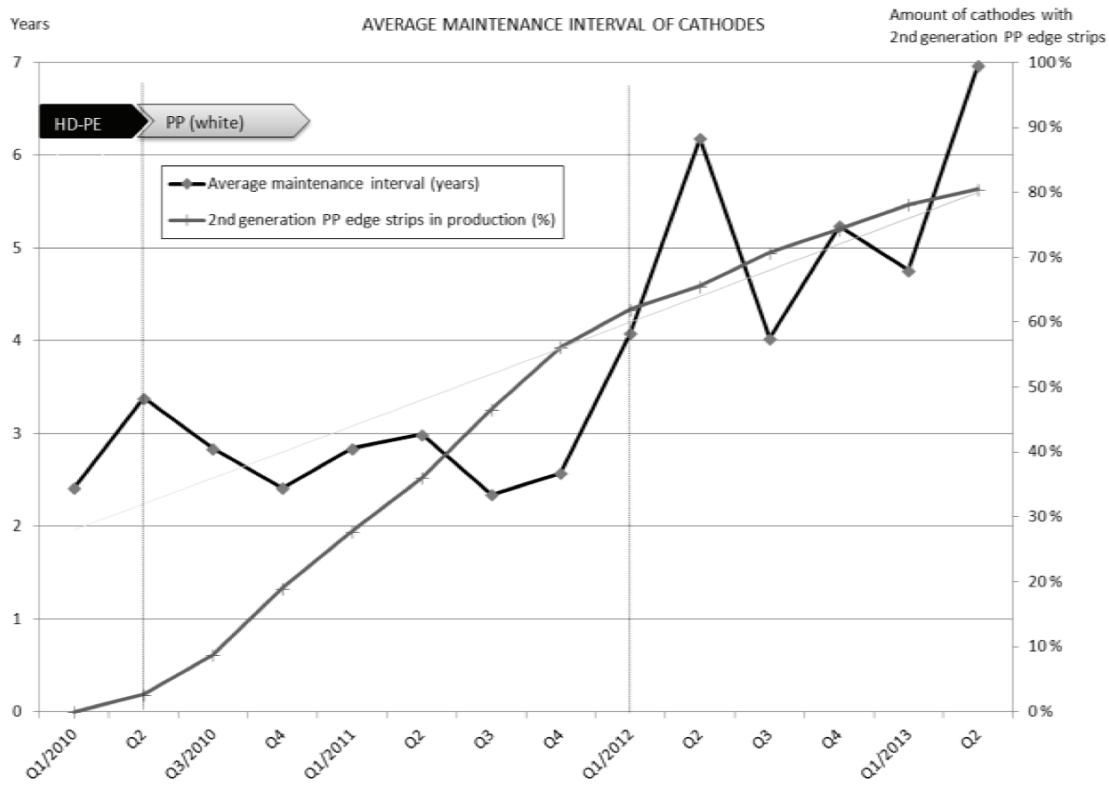

Figure 6. Average maintenance interval for New Boliden Pori plant's cathodes (left-hand vertical axis), and the percentage of the new second-generation polypropylene edge strips in the process

It can be seen that the first-generation material in Boliden's waxless and very demanding environment reached a lifespan from 2.5 to 3 years.

In the transition period, between Q2/2010 and Q1/2012, the older black HDPE edge strips were gradually replaced with newer white PP strips. However, the black edge strips still define the average maintenance interval at this stage, as improvements start to be seen only after most of the old material had been removed from maintenance circulation.

From Q1/2012 onwards the performance increase becomes clearer. As the percentage of newer PP edge strip material rises, the average lifetime can be seen to exceed 4 years in the last 1.5 years. No subsequent changes to materials or manufacturing methods have been made, so this can be considered as a steady-state result.

It is also worth mentioning that the plant’s production rate has consistently increased since 2010, as can be seen in Table II.

Table II. New Boliden Pori Cu-ER production

Year	2010	2011	2012
Production (t)	112 687	116 455	124 527
Change from 2010 (%)	-	+3,3 %	+10,5 %

From Table I and Figure 6 it can be concluded that there has been a significant improvement in the lifetime of edge strips since 2010.

It is also well known that many major copper refineries in Europe and the USA have exceeded 20 years lifetime for stainless steel permanent cathodes. This indicates that the cathode lifetime is not a limiting factor when looking into maintenance intervals beyond 4 years.

Edge strip replacement machine

As the development efforts of the second-generation direct moulding technology progressed, a parallel development project was initiated to provide a solution how edge strips could be replaced on site with smaller equipment without manufacturing lines and robots.

A transportable human-operated container version of the edge strip replacement machine needed to be developed. The dimensions of the developed unit are approximately 2.2 m × 5.5 m × 2.5 m (width × length × height) in transportation configuration, expanding to a footprint of approximately 6.0 m × 7.5 m in operating set-up (Figure 7). The machine weighs approximately 8 t and only one operator is required. If cathodes are to be lifted manually to and from the machine, then a second person is needed to assist in the lifting work.

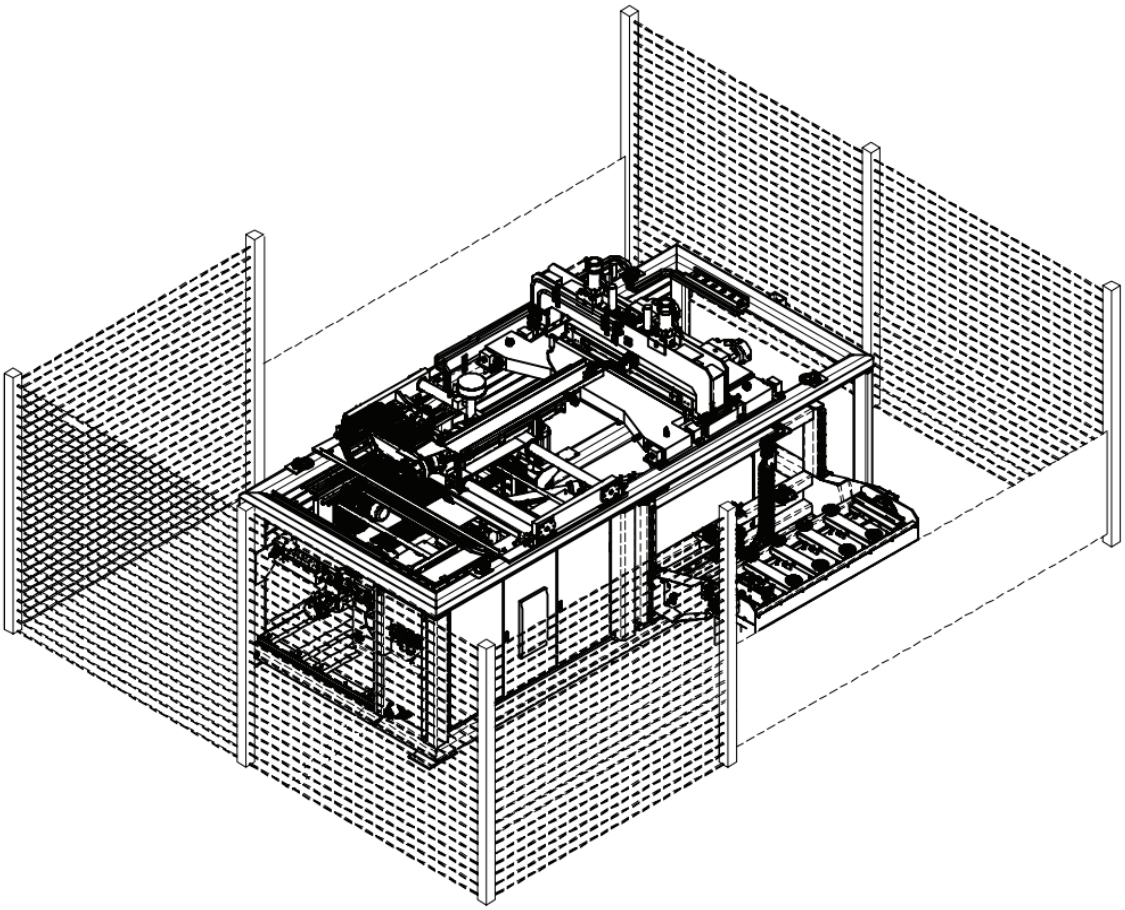

Figure 7. Mobile second-generation edge strip replacement machine with safety fences

Cathode maintenance concepts

Cathode maintenance can be considered an unwanted additional requirement when using permanent cathode technology. The maintenance approaches of operating plants can be divided into two main categories: plants who want to take care of the maintenance themselves at the site, and plants who don't want to have anything to do with the maintenance and want to outsource the job. To cater for both these needs, two different approaches are required.

Typical entry-level on-site cathode maintenance is based on manual labour, with quite a low level of technical equipment used for performing maintenance tasks (Figure 8).

Figure 8. Manual maintenance of cathodes

At the minimal level, a cathode maintenance workshop consists of:

- Edge strip removal tools: knives, pneumatic hammer, etc.
- Cathode straightening equipment: table and hammer
- Cleaning tools to remove residual metal from edge strip area: angle grinder
- Edge strip installation table or edge strip replacement machine
- Storage racks.

This equipment is often considered sufficient for daily operations. For these on-site needs, Outotec has delivered multiple machines to Brazil, China, Laos, and Spain during the past decade, and lately has also made available mobile maintenance equipment for short-term site visits, which has recently been used in Russia and South Africa.

However, when more serious damage to the hanger bar or plate has occurred, then more complex repair operations are needed and quite often these cathodes are sent off-site to be repaired. There are companies in the market who, in addition to fabricating cathodes, are also addressing these clients' maintenance service needs.

Since these maintenance workshops service more plants, equipment can also be more sophisticated (Figures 9 and 10), including:

- Plate straightening roller
- Cathode plate cleaning and/or buffing
- V-groove renewal
- Electrical plate straightness measurement equipment
- Reporting systems
- Plate and hanger bar replacement.

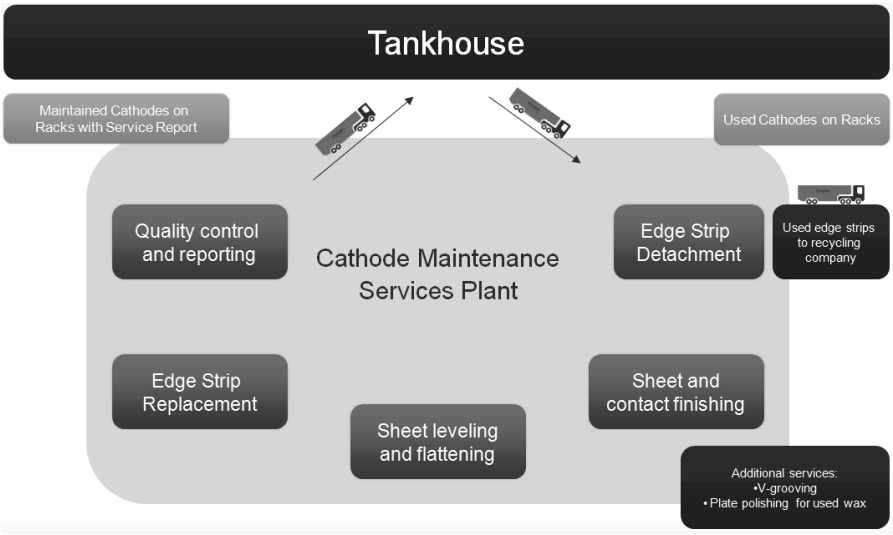

Figure 9. Off-site cathode maintenance workshop work flow

Maintenance is most often divided into two categories:

- Minor repair/standard service
- Major refurbishment/additional services.

Minor repair is a normal fixed-price based service, during which normal cleaning and edge strip replacement is performed. However, when more serious damage has taken place, for example requiring replacement of the hanger bar or the stainless steel plate, additional major refurbishment costs are then applied. These actions are often agreed on a case-by-case basis with the client.

In some cases clients transport cathodes for more than 2000 km to a maintenance workshop. Outotec operates one these more advanced maintenance workshops in Finland, where in addition to local plants, cathodes have been transported on a regular basis also from Austria for maintenance.

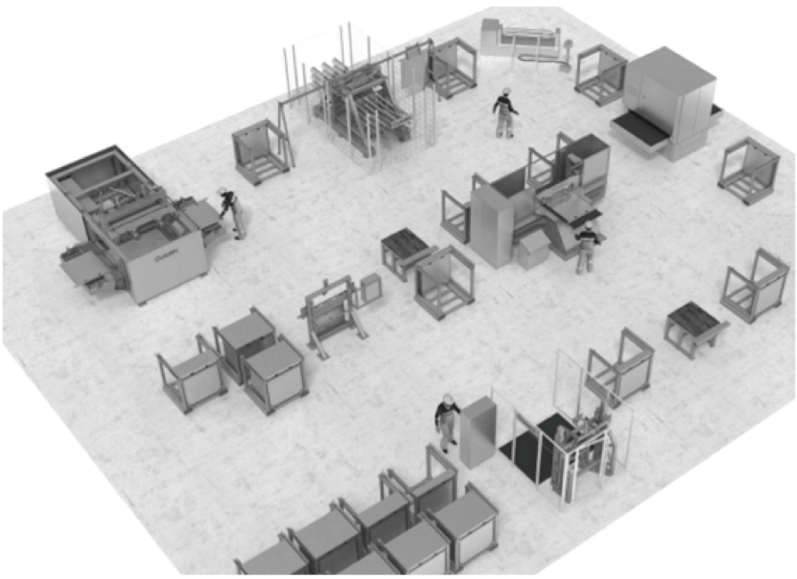

Figure 10. Cathode maintenance workshop

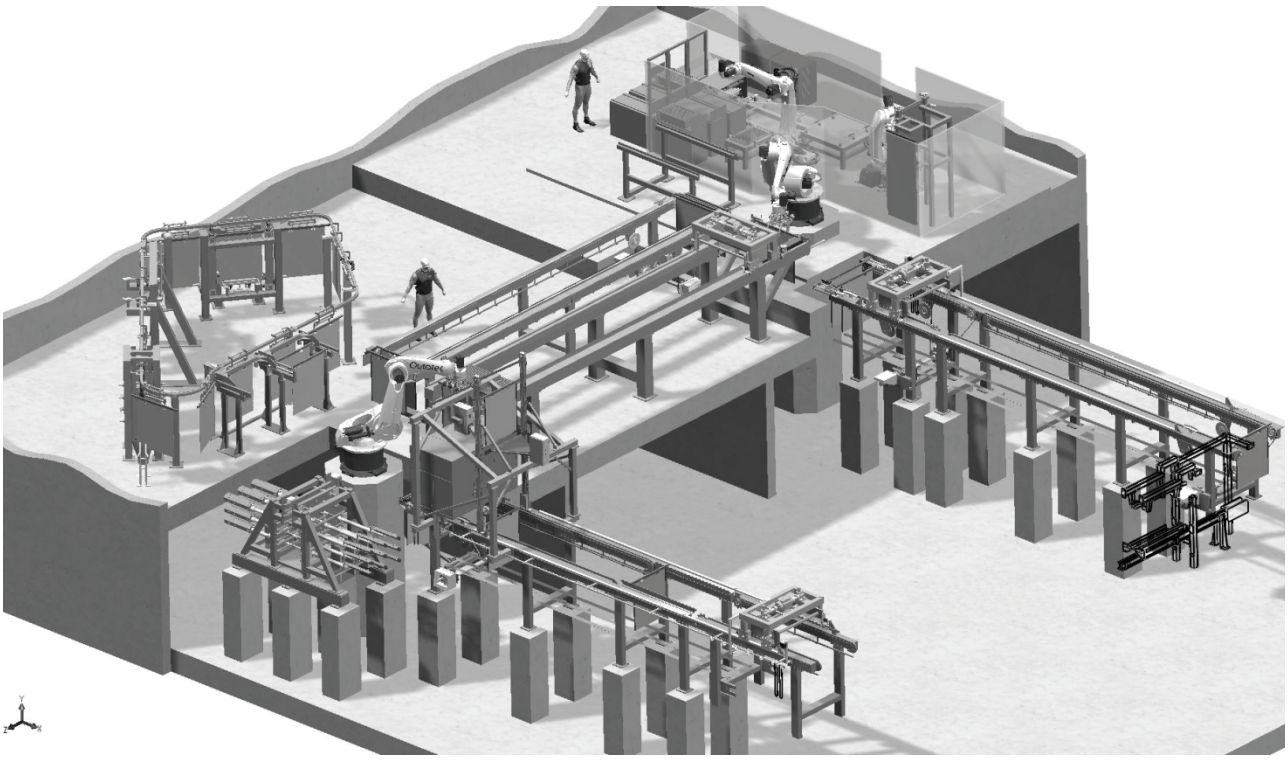

Figure 11. Full integration with conveyers to electrolysis stripping machine

The integration of cathode maintenance into electrolysis production equipment and material flow is new to the market. In this full integration, plates rejected in the full deposit stripping machine are transferred from the conveyor to a separate maintenance line (Figure 11).

The following tasks are automatically performed in this maintenance line:

- Identification of the cathode for back-tracking of reason for rejection from stripping machine
- Sorting of un-stripped B-grade cathodes to await separate processing
- Removal of edge strips
- Preparing of edge areas
- Plate polishing or buffing (if required)
- Plate straightening (hanging straightness, deviation from plumb)
- Laser marking of cathode with 2-D matrix code
- Installation of new edge strips
- Return to stripping machine by transfer wagon.

Key benefits of this arrangement are the high maintenance capacity as well as the significantly reduced amount of maintenance operating personnel needed.

The first system of this kind is currently being built and will be commissioned in the second half of 2013 for the New Boliden Rönnskär copper refinery in Sweden.

Conclusion

The development of permanent cathode technology has continued at Outotec. The results from commercial use of the new second-generation Outotec edge strip technology using polypropylene edge strips show that the average lifetime has exceeded 4.5 years – a significant improvement compared to the earlier technology.

Although simple manual permanent cathode maintenance is still common in electrolysis plants, more automated maintenance concepts are now available. Outotec has developed a transportable containerized version of cathode maintenance and edge strip replacement equipment, in addition to a unit that can be fully integrated with electrolysis production equipment and daily material flow operations. In this fully integrated unit, cathode plates rejected in the full deposit stripping machine are transferred to a separate maintenance line. Key benefits of this arrangement are the very high capacity of maintenance as well as the significantly reduced amount of operating personnel needed.

Acknowledgements

The authors would like to acknowledge Boliden Harjavalta Oy for permission to publish maintenance data of their permanent cathodes.

References

Virtanen, H., Marttila, T., andPariani, R. 1999. Outokumpu moves forward towards full control and automation of all aspects of copper efining. *Copper 99 – Cobre 99. Proceedings of the Fourth International Conference. Vol. Ill. Refining and Electrowinning of Copper*. Dutrizac, J.E., Ji, J., and Ramachandran, V. (eds). pp. 216-217.

Marsden, T. and Jickling, J. 2009. The next generation of permanent cathode and lead anode technology. *Southern African Hydrometallurgy Conference 2009*, 24–26 February. *Symposium Series* S54. Johanesburg, Southern African Institute of Mining and Metallurgy. pp. 249-255.

Alexander, G. 1997. Edge strip performance and development, new developments in the elimination of wax. *ISA Process Users Conference*, Antwerp, May 1997.

Cutmore, J. 1997. Edge strip performance and development. User requirements – an overview. *ISA Process Users Conference*, Antwerp, May 1997.

Outotec. 2012. Maintained cathodes ensure refinery's cost-efficiency. http://www.outotec.com/ImageVaultFiles/id_662/d_1/cf_2/Maintained_cathodes_ensure_refinerys_costefficienc.PDF [Accessed 24 July 2013].

Outotec. 2013. Cathode maintenance services. http://www.outotec.com/ImageVaultFiles/id_811/d_1/cf_2/OTE_Outotec_Cathode_Maintenance_Services_eng_web.PDF [Accessed 24 July 2013].

The Author

Lauri Hannes Nordlund, *Manager – Tankhouse Equipment,* Outotec (Finland) Oy

M.Sc. in mechanical engineering and industrial management.
12 years on different product development and project management tasks for three different companies (Metso, Planmeca, Outotec).

Henri Kalervo Virtanen, *Development Manager, Tankhouse R&D,* Outotec (Finland) Oy

Career spanning 25 years at the Outokumpu Pori copper refinery in different positions. Development manager in the field of electrorefining, electrowinning, and solvent extraction at Outotec Pori Research Center since 2001.