LETšENG MINE No. 2 PLANT PROJECT – A PROCESS ENGINEERING AND DESIGN REVIEW

F Bornman
Bateman Engineering Projects

Abstract

Bateman Engineering managed the establishment of a second diamond treatment plant at the Letšeng Mine in the Mokhotlong District of northern Lesotho, about 100 km from the town of Buthe Buthe. Letšeng Diamonds Proprietary Limited, is owned 70 % by Gem Diamonds and 30 % by the Government of the Kingdom of Lesotho.

The second plant, which commenced construction in late 2006, doubled Letšeng Mines' hard rock processing capacity from 2.6 million t/yr to 5.2 million t/yr, making it the worlds' seventh largest diamond mine by throughput. Bateman Engineering provided the engineering design, procurement and construction management of the new plant.

The contract covered a facility to process Run-of-Mine (ROM) and stockpiled ore to produce concentrate, using a dense media separation (DMS) plant, which is fed to the existing diamond recovery plant at the mine. Provision was also made for a tailings disposal system.

The new plant, known as Plant No. 2, augments the production from the existing plant Plant No. 1 and has a nominal processing capacity of 350 t/h with a planned production of about 45,000 carats/yr during a 20-year life.

Figure 1: Letšeng Diamond Treatment Plant, Lesotho

1.0 Introduction

Diamond production at Letšeng re-commenced in November 2004 after a 20-year break, and with encouraging early results the mine is maintaining its reputation as a large-stone producer.

The kimberlite at the mine is known for its high proportion of large and high-value diamonds. It is estimated that nearly 15 % of the diamonds in the ore are larger than 10 carats in size and recently the mine has recovered three of the worlds' top 20 diamonds. This includes the 15th largest, called the Lesotho Promise, of 603 carats, unearthed in August 2006 and the 18th largest, the 493 carat Letšeng Legacy, unearthed in September 2007. The 20th largest (478 carats) was unearthed in 2008, named the Leseli la Letseng (Light of Letseng).

Figure 2: The Lesotho Promise, 603 carats

The Letšeng operation is the highest diamond mine in the world, located at an altitude of approximately 3 200 m in the Maluti Mountains. With regular snowfalls, particularly in winter, the ambient temperature ranges from about –18 °C to 20 °C. Because of the exposed nature of the site, however, the chill factor (-1 °C/mile/hr) of the strong winds often reduces this to –20 °C and below.

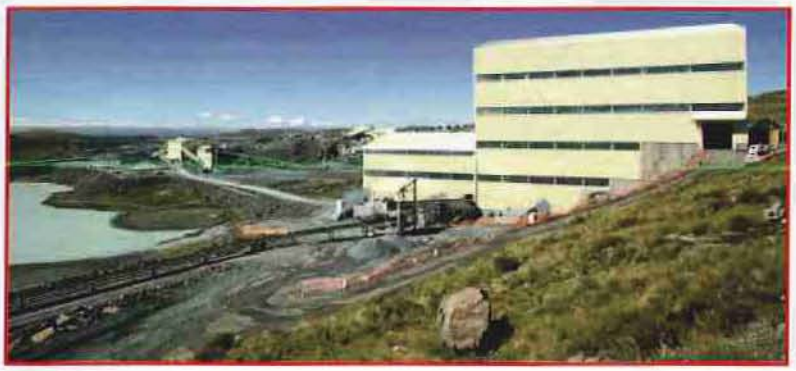

Figure 3: Letšeng No. 2 processing plant can be seen in the foreground

2.0 Process Design Philosophy

The project scope called for a "doubling up" of the existing process. The new facility was designed to treat the "worst case" coarse plant feed while maintaining the average head feed rate of 350t/h, with a maximum feed rate of 400t/h. The plant was designed to process the Satellite and Main Pipe material. The new plant was to be located near to the existing plant and to operate independently.

The Letšeng Diamond Mine Plant No. 2 called for a unique design and required operating life of 25 years. The design provided for a gravity fed DMS for large-stone processing and for power outages. Proven technology was to be used in the design in order to produce an efficient process that facilitates a simple maintenance program resulting in a high level of availability.

The plant was designed to operate 30 days per month for 352 days per year. The design was to ensure that all new project equipment has an Engineering Availability of ≥ 90% and a Plant Utilization ≥ 80%. The design philosophy calls for minimum stand-by equipment (only thickener underflow pumps) to ensure a simple maintenance program.

The process design philosophy addressed the following objectives:

2.1 Ore Dressing Studies

A number of ore dressing studies had been undertaken by different consultants including Mintek. These include:

- Product size distribution test work on site.
- Ore characterisation test work from the Letšeng Satellite Pipe, Stockpile and Main Pipe.
- Densimetric analysis.
- Bond Work Index.
- Impact comminution.
- Abrasion comminution.
- DMS yield.
- Ore strength.
- Potential diamond breakage.
- Initial mass balance.
- Slimes test work.
- Recovery audit.
- Preliminary geotechnical investigation.
- Primary Crusher trade-off study.

2.2 Capital Cost

A number of different plant layouts were developed during the study phases of the project. The aim of the different layouts was to keep the plant footprint as small as possible. A larger footprint mainly resulted from the use of conventional belt conveyors, which can typically only achieve maximum inclinations of 14-16 degrees when transporting kimberlite.

A large plant footprint was not desirable since it would:

- Increase costs associated with blasting, cutting and filling of the site.
- Increase costs associated with roads and access ways to the new plant.
- Increase the distance between the various sections of the plant, thereby increasing cable and conveyor lengths and associated costs.
- Potentially increase operational costs since more operating personnel will be required.
- Lend itself to other operational problems associated with plant areas spread over a larger area.

The design philosophy was to have a plant with the smallest footprint as possible without compromising the process. The area was to be small to minimise capital expenditure. The wind load also played a factor; therefore the building height, length and width also affected capital. The plant had to be shielded from the severe weather conditions, all equipment had to be enclosed and required a compact layout.

Figure 4: The compact layout

2.3 Plant Layout

A suitable area on the western side of the existing slimes dam, north of the existing substation was identified as being the most suitable position for the new plant. Factors taken into consideration in selecting this site were:

- Indication from Letšeng management not to build any new structures within a perimeter of 500m from the final pit limits.
- Close proximity to the existing substation which would reduce cable lengths and associated costs.
- Relative close proximity to the existing pre-crusher from which material needs to be sourced.
- Close proximity to the existing slimes dam which could result in reduced costs associated with slimes pumping.
- Relative close proximity to existing offices and workshops.

The plant was constructed on an existing ground slope of 17 degrees to the horizontal. The natural slope of the mountain was used to design the gravity fed plant. The plant was built on different terraces which allows for the material to be gravity fed from stage to stage. The client undertook all blasting, bulk filling and earthworks in this regard. The footprint of the bulk rock excavation was set at 30m wide x 95m long, incorporating four stepped terraces with heights varying from 3m to 10m.

The slimes from the primary and re-crush sizing screens gravity feed into the plant effluent sump. The design philosophy was to save energy consumption and capital expenditure by minimising pumps in the flowsheet. This also results in lower operational cost in terms of spare parts and maintenance.

Figure 5: 3D rendering of the No. 2 Treatment Plant

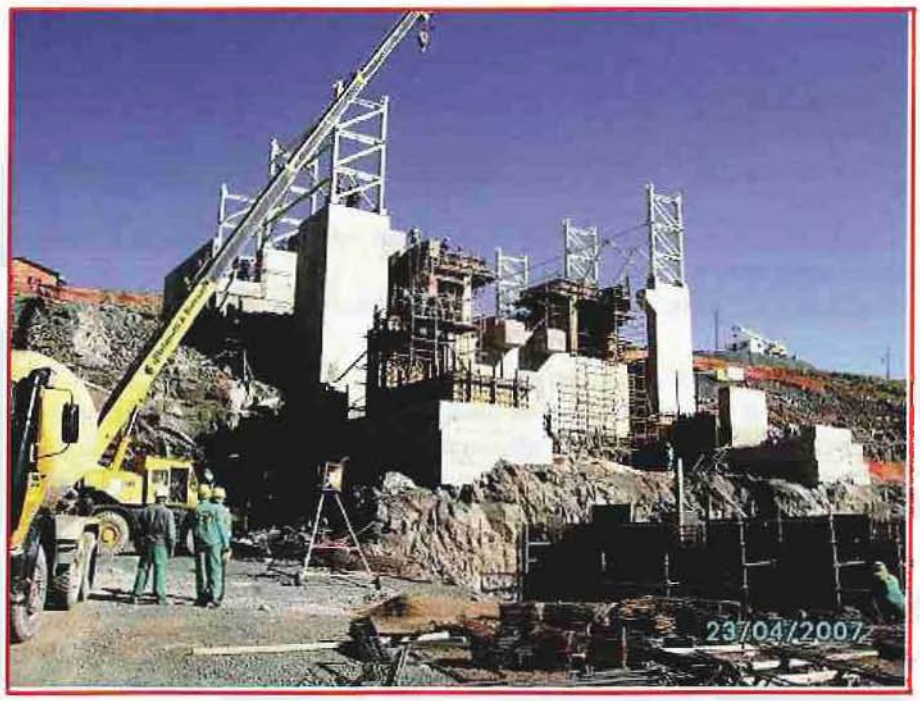

Figure 6: The plant foundations on different terraces

2.4 Material Handling

In order to address the client requirement of a small plant footprint, it was decided to investigate the use of vertical conveyors. A site visit to Columbus Stainless by the Client (Letšeng Diamonds and its contract operator Minopex), Metso Minerals (Supplier) and Bateman was undertaken by the respective representatives to assess vertical conveyors in operation there.

The consensus from the Columbus site visit was that the vertical conveyors are sound, both from an operational as well as a mechanical point of view. The only concern that remained after the visit was the spillage that was caused by the vertical conveyors and its ability to treat wet, fine kimberlite.

The Metso Minerals factory in Germany, where the components for the vertical conveyors are manufactured, was also visited by the Letšeng, Minopex and Bateman representatives in October 2005. The visit instilled confidence in the use of vertical conveyors and also highlighted the need to procure spare belting and sub-components with the initial order, since spares are not kept in stock by Metso South Africa.

Currently, the Alrosa Factory No. 14 Plant near Nyurba in Russia is the only other known diamond mining operation where vertical conveyors are employed to transport kimberlite and a site visit was undertaken by Letšeng and Minopex representatives to the Alrosa Factory No. 14 plant in Russia. Following the visit, both Letšeng Diamonds and Minopex expressed their satisfaction with the operation of the vertical conveyors and it was decided and agreed that vertical conveyors will be used in the design of the new plant.
The various visits however highlighted that the vertical conveyors are very prone to spillage caused by fine material sticking to the return belt.

Items to address the spillages were catered for in the study as follows:

- Driven wrappers on the return belt to knock fine material free from the return belt.
- Slightly oversized screens feeding onto vertical conveyors which would reduce the amount of fine undersized and misplaced material reporting to the belts.
- Longer than normal horizontal discharge sections of the vertical conveyors which would allow fine material to report to bins or equipment where they are intended to report to.

Figure 7: The vertical conveyors

2.5 Gravity fed DMS

The philosophy was to have a split DMS (coarse and fines) each treating approximately equal quantities.

The design allowed for the secondary sizing screen to act as a preparation screen for both the Coarse and Fines DMS thus saving equipment and power costs. The secondary sizing screen was positioned at floor level to reduce the civil and structural cost of the building. A preparation screen at the DMS mixing box level would have required more height and could have caused additional vibration in the steel structure. The objective was to remove as much fines as possible via the secondary sizing screen on floor level before the feed material was discharged into the pockets of the vertical conveyors. Fines tend to get stuck in these pockets and causes spillage.

The DMS material is fed via vertical conveyors to the feed storage bins. The design was such that the coarse cyclone pressure will be 12D and the fines will be 14D. The design was on the limit due to the height restrictions, there was no more room left to increase pressure by gravity.

The initial design included header tanks above the mixing boxes to gravity feed medium to the boxes. These header tanks were removed from the flowsheet in order to save

height on the building and hence medium was to be pumped directly from the correct medium tank to the mixing boxes.

The residence time in the DMS feed bins was reduced to 15 minutes in order to have these bins as small as possible, again to save cost on civil and structural requirements and building height. The same applied for tanks and sumps, the design allows for the minimum volumes in order to fit these in the allowable space.

The coarse and fines cyclone concentrate (sinks) reports to a combined concentrate screen, again in order to reduce the amount of equipment and capital cost.

Figure 8: The gravity fed Fines DMS showing the cyclones and float screen

2.6 Maximum Diamond Liberation

The Run-of-Mine material is crushed in the primary crusher to 125mm. The material is then scrubbed to reduce clay and to aid in the liberation of the diamonds from the kimberlite. Primary sizing is done where the +45mm material is re-crushed in the secondary crusher. The coarse fraction (-45+15mm) is treated in the Coarse DMS. The finer fraction (-15+2mm) is treated through the Fines DMS.

The Coarse DMS floats are crushed through the re-crush crusher to liberate locked up diamonds. The crusher product is returned to the secondary sizing screen and retreated through the DMS.

From the fines float screen the -15mm material is conveyed to the coarse tailings dump via the tailings conveyor.

2.7 Minimise Diamond Damage

The design philosophy was to use gravity flow of dry material as far as possible.

Coarse crushing occurs in the primary crusher (125mm). No grinding media is added in the scrubber, the process is autogenous. Large diamonds will be recovered in the Coarse DMS up to 45mm in diameter; a 30mm diamond is roughly 200 carats. The sink screen concentrate from both DMS plants is collected in specialized containers. No pumping of concentrate to a holding hopper occurs as this could result in diamond breakage.

3.0 Project Challenges

A major challenge was to transport large pieces of equipment up the narrow winding mountain passes. The same transport company the mine uses, was used. Fewer logistical problems were encountered due to their broad experience.

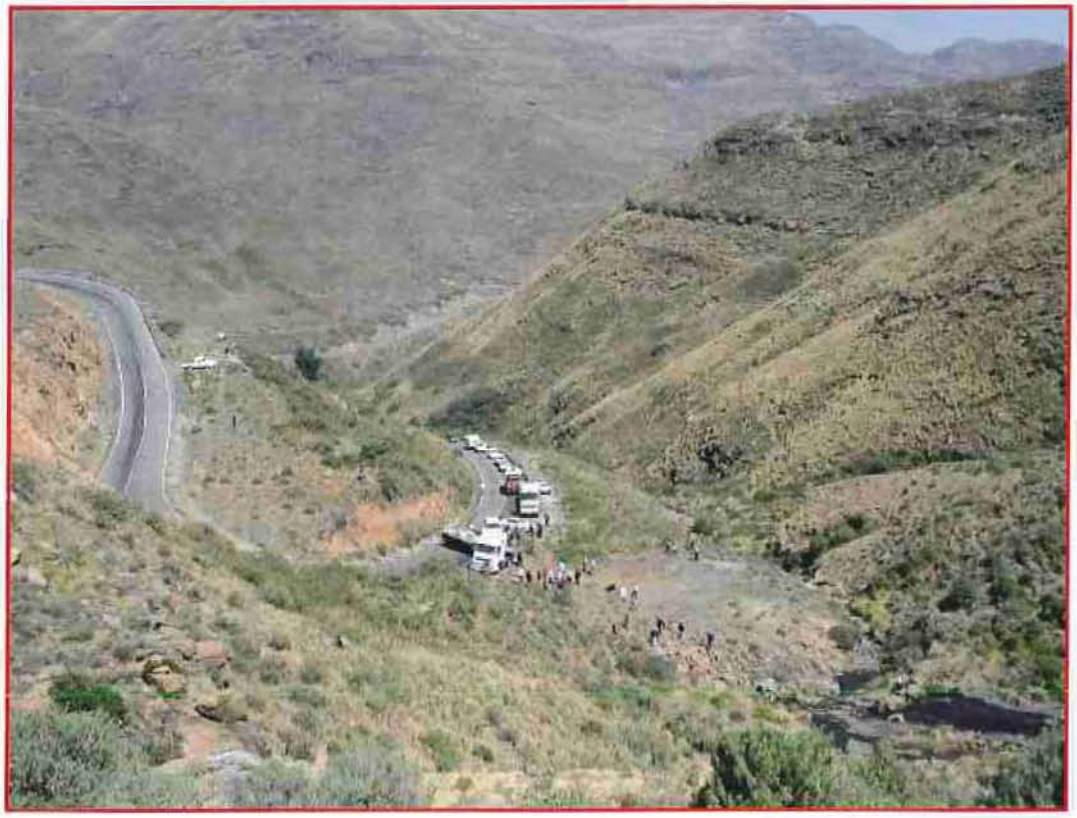

Figure 9: Typical view of a mountain pass

Another challenge according to the project schedule was the constructing of the building before winter. To make the cold weather concreting possible a strict cold weather concreting specification was developed. Necessary precautions against the cold weather that were required during concreting operations included the use of tarpaulins to protect aggregates, use of floodlights to heat the aggregates, pre-heating of aggregates and water, measures to control mixing of the concrete, and controls for the placing of concrete and to ensure curing of the concrete.

Figure 10: The construction of the building during winter

4.0 Processing Circuit

The DMS circuit is comprised of a Coarse DMS with a maximum feed rate of 253 t/h and a Fines DMS with a maximum feed rate of 277t/h. The coarse floats are re-circulated to a re-crush crusher. The undersize of the re-crush crusher screen is fed to the preparation screen. The oversize is returned to the re-crusher. The concentrate from the DMS circuit (fines and coarse) proceeds to the existing diamond recovery facility.

A new 20 m diameter Bateman Thickener is used to recycle a large portion of the process water and the thickened waste is sent to the existing tailings dam.

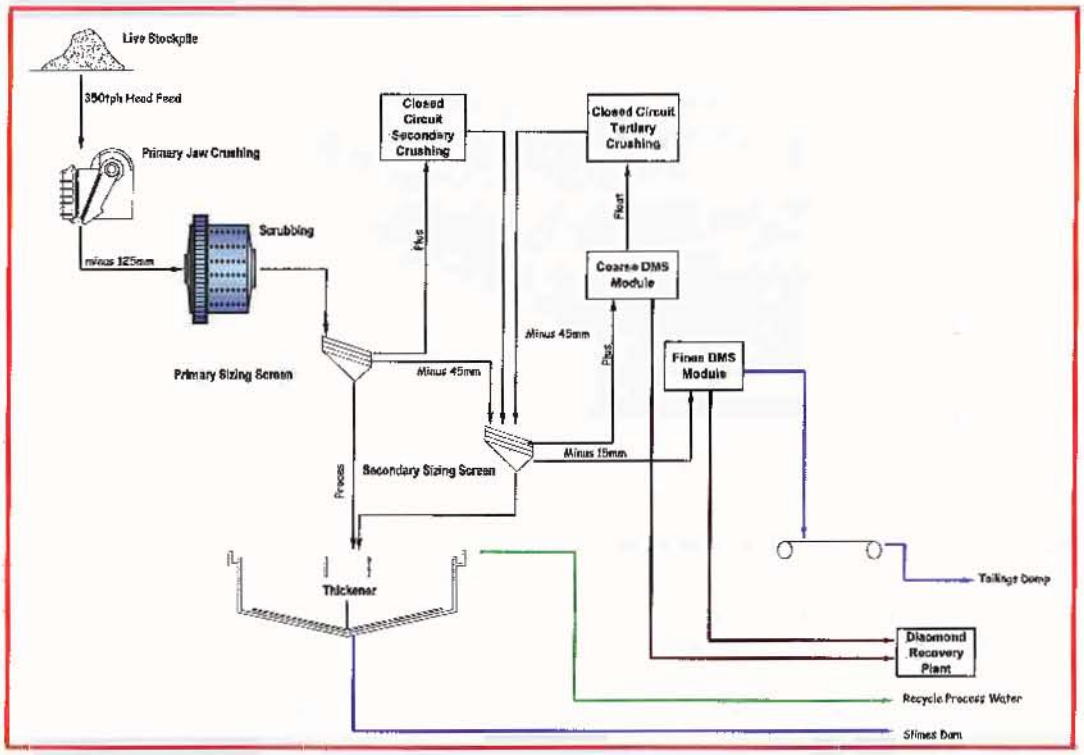

Figure 11: Letšeng No. 2 Plant Process Flow Diagram

5.0 Modifications During Commissioning

A number of small modifications were made to screen panel sizes, static panel steelwork and chutes during commissioning and are summarized as follows:

- Primary screen panels and aperture cut size – due to the shape of the feed aperture blinding was a problem. Square apertures (45mm) were replaced by 75mm x 55mm oval type.
- Re-directing the primary sizing screen underflow discharge pipe to the underpan of the secondary sizing screen.
- Maintenance access to the float screen static drain sections – the hatch was too small to give full access to the panels.
- Deflection panels on the sink screen drain and wash sections – to reduce the velocity of the material across the deck and increase the drainage durations.
- Densifier feed pump changes in order to obtain 300kPa inlet pressure.
- Coarse DMS correct medium pump speed changes to increase medium flow to the mixing box.
- Mixing box changes to increase medium flow to the cyclones.
- A control system was put in place for the thickener tailings pumps.

Figure 12: Sinks screen with deflection panels

6.0 Post Commissioning Performance

An analysis of plant production data from April 2008 to July 2009 was carried out to verify the average plant performance.

The average feed rate to the plant during the period was calculated at 368.7t/h which met the average design throughput rate of 350t/h.

Figure 13 shows the Letseng No. 2 Plant production throughput since commissioning commenced. The production throughput was almost consistently above the average design capacity after the initial ramp-up period.

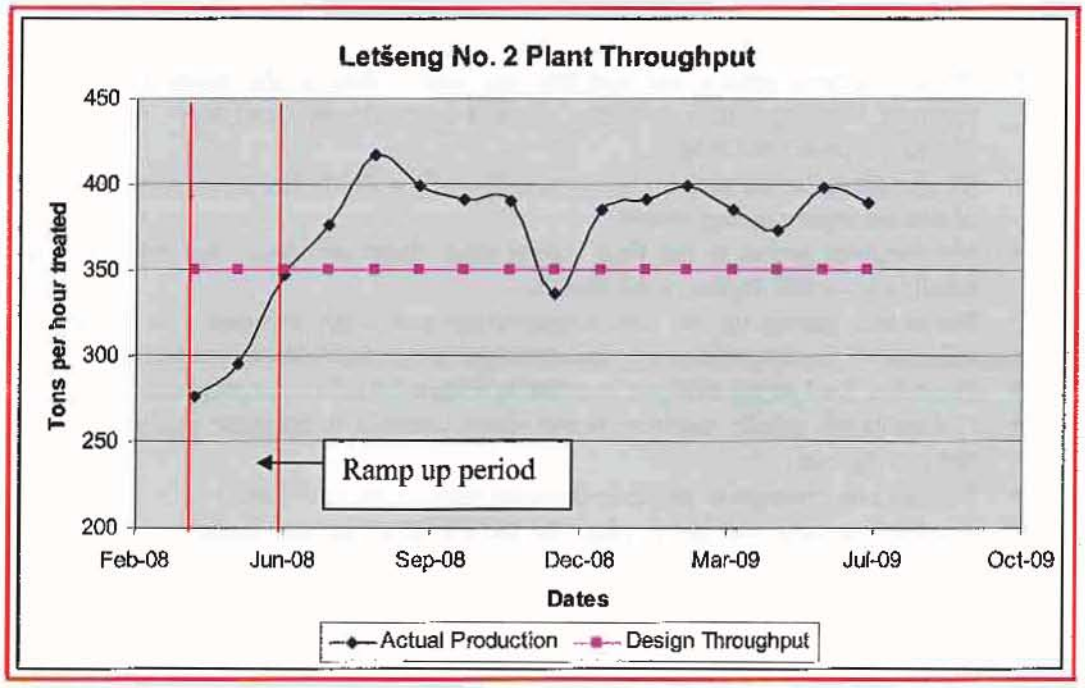

Figure 13: Letšeng No. 2 Plant production throughput

7.0 Conclusions

- The Letšeng No. 2 Plant was custom-designed to meet the specific requirements of the Client and to suite the site conditions.
- The natural slope of the mountain was used to design a gravity fed plant - material is gravity fed from stage to stage.
- The plant was designed and built in the constraints of height and surface area.
- The design throughput rate as per process design criteria was exceeded.
- Challenges such as transport of equipment up narrow winding mountain passes, working at altitude and steep inclines were overcome.
- Letšeng Mine No. 2 Plant project won the 2009 Fulton Award in the category Construction Techniques for excellence in cold weather concreting.

The Letšeng No. 2 Plant project was unique. Several difficulties had to be overcome during the project execution. Lessons were learned from the design phase through to final commissioning. These were profitable lessons learned in times of challenges.

8.0 References

1. *B. Megannon, Letšeng Project Execution, Process Design Criteria, Document No. M7170/P670/001, December 2006.*
2. *B. Megannon, Letšeng Project Execution, Process Strategy, Document No. M7170/P370/001, July 2006.*
3. *B. Megannon, Letšeng Project Execution, Process Guarantees, Document No. M7170/P300/001, December 2006.*
4. *Bateman Engineering, Project Profile & Globe 70.*
5. *B. Lord, D. Naidoo & H. Gopal, Letšeng Project Execution Functional Specification, Document No. M7170-P030-001, June 2008.*
6. *C. Green, Letšeng Diamond Mine Project, Process Description, Document No. M7170/P670/001, November 2005.*
7. *C. Green, Letšeng Project Execution, Commissioning Procedure, Document No. M7171/P410/001, August 2007.*
8. *Civil Engineering, In Brief Article, July 2009.*
9. *D. Naidoo & E. Bekker, Investigation around Thickener, May 2008.*
10. *D. Naidoo & Kie, Letšeng Diamond Mine Plant No. 2 – Commissioning Close Out Report, Document No. M7170-0740-001, June 2008.*
11. *E. Bekker, F. Bornman, R. Machowski, Letšeng Mine No. 2 Plant DMS Evaluation, Document No. C1016-P600-001, July 2008.*
12. *E. Bekker, Letšeng Diamond Mine – Technical Inspection Report, Document No. M-P600-001, March 2008.*
13. *E. Gilfillian, Letšeng Mine Vertical Conveyors – Note for the Record, Document No. M7170-P600-005, May 2008.*
14. *G. Joyce, Letšeng Diamonds Class II Feasibility Study, Bateman Project No. M7170, January 2006.*
15. *H. Gopal, Densifier Feed Pump Changes – Note for the Record, Document No. M7170/2600/026, April 2008.*
16. *H. Gopal, Correct Medium Circuit Changes – Note for the Record, Document No. M7170/2600/027, April 2008.*
17. *J. Houghton, Personal Communication, September 2009.*

The Author

Faan Bornman, *Senior Process Engineer*, Bateman Engineering Projects

Faan started his career with BHP Billiton at Manganese Metal Company. He spent 10 years in the electrowinning industry.He joined ITM Mining in 2003. ITM has alluvial diamond mining operations in Angola. He also spent time at diamond mining operations in Sierra Leone and DR Congo. He filled the positions of plant metallurgist, chief sorter and project manager. Faan joined Bateman in 2008 as a Senior Process Engineer. He was a member of the commissioning team at the Finsch Main Treatment Plant Upgrade and also the Letšeng No. 2 Plant Projects. Faan is currently responsible for Batemans' Consulting Services and the development of new technology for diamond sorting.