Chapter 12

Retreatment of Residues and Waste Rock

D.W. Bosch

12.1 Introduction

From the commencement of gold mining on the Witwatersrand in 1887 up to 1984, a total of approximately 4,2 billion tons of gold ore has been milled in South Africa. The deposition of gold mine residues has left the country, particularly Johannesburg and its neighbouring cities in the central Witwatersrand, with a legacy which has not only been an eyesore but also a source of irritation and dust pollution in the dry, windy season, and contaminated run-off water in the rainy season. Large amounts of money have been spent combating this pollution and as a result of successful vegetating of their surfaces, the residue dumps in the Johannesburg area have now become well known as landmarks identifying the Golden City.

Extraction of the low grade gold content of the dumps has long been researched by metallurgists and recently a number of developments have combined to make the retreatment of gold residues a profitable proposition, not the least of which have been:

- the rise in the rand price of gold;
- modern metallurgical technology leading to more efficient extraction processes with lower costs;
- the high value of the property which becomes available for further development after removal of the residues.

12.2 Origin of Residues

12.2.1 Sand dumps and slimes dams

Residues contained in sand dumps and in slimes dams consist essentially of three different products, namely separate sand and slime and slime from the all-sliming process.

In the early days gold was recovered from stamp-milled material by gravity concentration only. Later, in 1890, the product of stamp milling was split into sand and slime fractions. The sand was treated by percolation cyanidation, whereas the slime was accumulated for lack of a suitable treatment process.

In 1894 the decantation process for slime treatment was introduced. Both accumulated and current slime were leached. This resulted in two discard products; sand which contained about 11% minus 75 μm, and slime which contained about 95% minus 75 μm fines. Gold values of the material depend-

ed on a number of factors but ranged from 0,3 to 1,5 g/t for sand and 0,05 to 0,50 g/t for slime.

Tube mills were introduced in 1904 to grind the stamp mill product further, and this reduced the ratio of sand to slime. This development was accelerated by the introduction of the all-sliming process in 1918. However, sand treatment plants were slow to be phased out and the method persisted for many years. By 1936, 40% of the ore milled was still leached in sand treatment plants. Almost 20 million tons of sand per year was still deposited onto dumps. By 1946 this figure was considerably reduced and in that year only 13% of the ore, amounting to some 7,3 million tons, was treated in sand plants.

Today tailings from the all-sliming process constitute virtually all the residues from gold plants. The size range of this material is between 65 and 80% minus 75 μm and typical gold values range from 0,1 to 0,5 g/t. In a few exceptional cases accumulated tailings have values between 0,5 and 1,0 g/t. Gold plant tailings at present amount to a little over 100 million tons per year and this figure is expected to increase in the future. The tendency is to mine lower grades, which will result in lower gold values in residues.

A new development in the industry is the classification of the residue by cycloning and the use of the cyclone underflow for backfilling underground. During cycloning a small degree of upgrading of the gold value occurs in the cyclone underflow and this gold will obviously not be available for recovery at a future date unless treated underground. The cyclone overflow which will be deposited on the slimes dams will be considerably finer than the original residue (>95% minus 75 μm) and of a lower grade.

The backfilling programme is still in the early stages of development and the amount of residue being placed underground is insignificant. However, it is predicted that most South African gold mines will be using residues for backfilling within 10 years. The amount of residue which can be used for backfilling is up to 45% of the tonnage mined. A significant reduction in residue tonnage for deposition on slimes dams, as well as a reduction in the gold content of this material, can therefore be expected.

12.2.2 Rock dumps

Waste rock arises from two main sources, namely underground development and sorting. In both cases the waste is mineralised to a greater or lesser extent. The values are very heterogeneously distributed amongst the rock pieces and vary so widely in magnitude that the grade of a bulk sample is only meaningful if no upgrading is contemplated. Waste rock from off-reef development can become contaminated during transport to surface by mineralised rock from unpay and marginal areas, from mistakes in tramming and tipping and by gold bearing fines with which it may have come into contact.

Rock pieces rejected by sorting should only be those mineralised to a lesser extent than the cut-off grade. However, as currently available sorting methods, whether manual or machine, rely on some secondary characteristic of the ore which seldom correlates precisely with gold content, and as machine sorting is carried out on the basis of interrogation of individual particles at

high speed, statistics dictate that there will be sorting errors. Whether the waste rock comes from development underground or from the reject fractions of sorting, it is conveyed to large dumps where it is stockpiled until some use can be justified for it, for instance aggregate preparation for civil engineering works, ballast for railway tracks, rockfill or treatment for gold recovery. By far the largest quantity of material from the waste rock dumps goes into civil engineering works without prior treatment for gold extraction. This was understandable when gold was $35 per ounce, but disposal in this way needs regular review in the modern climate of fluctuating gold price and currency exchange rates, continuously rising costs and the advent of new technologies.

12.3 Sampling, Surveying and Valuation

When the reclamation of residues for retreatment is considered, information pertaining to the dumps is required in order to carry out feasibility studies that will determine whether a proposed retreatment programme can be profitable. Part of this information is acquired from the mine surveyors, who would normally be responsible for supplying plans of dumps, dams and surrounding areas as well as computing volumes and values of the residues to be treated. The computation of dump or dam tonnage from volume obviously requires the determination of the *in situ* bulk density of the material.

The plans, compiled by aerial photogrammetric means, provide topographic and cadastral information essential for the planning and layout of the plant and other buildings, pipe lines, conveyor belts, and for the application for and registration of legal rights such as servitudes, way-leaves, surface rights and dump permits (Section 161 of the Mining Rights Act and Regulations (Act No. 20 of 1967)). A brief description of the sampling, surveying and valuation techniques used to obtain the volumes and values of residues is given below.

12.3.1 Sampling

A number of sampling methods are employed for the determination of residue values. Time, cost and relevant requirements will dictate the method to be used for any one set of circumstances.

12.3.1.1 *Grab sampling*

Samples are taken, preferably on an even grid system covering the entire dump or dam surface. Easy access makes this a cost-effective method for the acquisition of either small samples for assay purposes or bulk samples for metallurgical testing, especially in a preliminary investigation. There is, however, the danger of the samples not being representative in their response to treatment processes due to surface oxidation.

12.3.1.2 *Groove or channel sampling*

This method is used quite effectively to sample a slimes dam that has been covered by sand or, as is often the case, by building rubble or other refuse, and only the sides of the dam are exposed for sampling. The samples are

cut from the slime in even, equidistant grooves or channels, on the line of true dip over the entire length of the face slope. Care must be exercised to reduce the measured length of channel sampled to the true vertical depth of the dam. As for grab sampling, the method is useful in providing limited information with reasonable ease.

12.3.1.3 *Drilling*

Auger drilling

Little use has been made of auger drilling for sand or slime sampling except with lightweight hand-held augers, where penetration depth is severely limited.

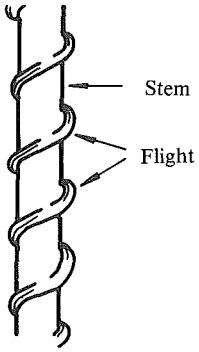

Figure 12.1. Solid auger flight arrangement.

The Sandrill

A power-driven rig known as the 'Sandrill' is an hydraulically operated auger drill which is extremely mobile and can reach virtually any site. The drill is constructed with an outer casing having removable hardened cutters, within which counter-rotating flights draw the sample up into the sample barrel. Extensions of aluminium tubing are fitted with an inner drive tube on ball bearings. The complete unit weighs approximately 73 kg (Figure 12.2). The rig is capable of penetrating to depths in excess of 90 metres at a drilling rate of between 50 and 300 metres per day, depending on the local conditions and the depth from which the sample is being taken (MacDonald, 1983).

The Sandrill is the most effective of the sampling methods mentioned. The other techniques, including the hand auger, are limited largely to providing surface information. To obtain relevant data it is necessary to penetrate all parts of a dump or dam and the Sandrill accomplishes this task with reasonable ease at a relatively low cost. However, this method of drilling is not without limitations as the lightweight drill cannot negotiate hard objects such as rocks, wood and scrap iron frequently encountered in dumps and dams.

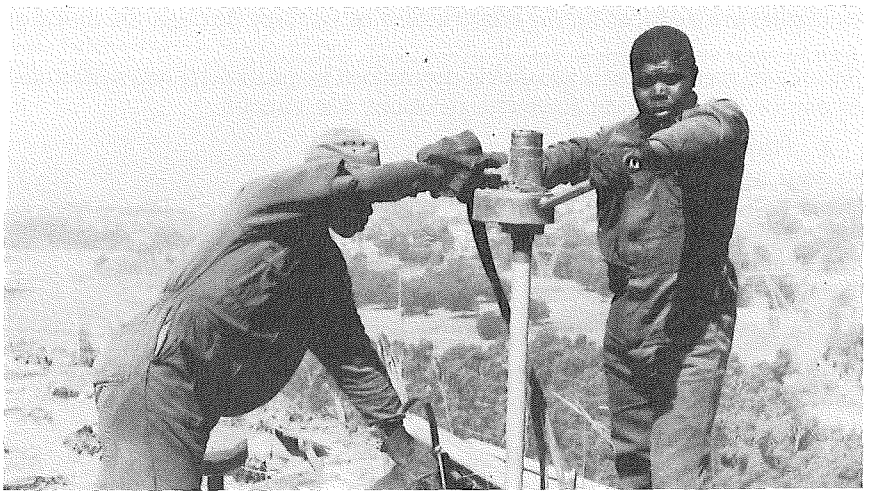

Figure 12.2. Core drilling on a Witwatersrand sand dump using a 'Sandrill'.

12.3.2 Surveying

Surveys of gold residue dams and dumps and surrounding areas are required for:

- the compilation of accurate working plans;
- the determination of volumes and tonnages for planning purposes, and
- the determination of volumes and tonnages for grade predictions and metallurgical comparisons.

The surveys necessary to obtain the above plans, volumes and tonnages can be carried out using a variety of instruments and methods. The method of survey chosen will depend on the degree of accuracy required, the urgency of the survey, and financial limitations.

12.3.2.1 *Tacheometric surveys*

The term tacheometry is derived from the Greek 'takhos' (speed) and 'metron' (measure) and therefore signifies the art of rapid measurement. However, the advent of electronic distance measuring instruments has to a large extent superseded the 'tachy' survey. Nevertheless, when surveying small dumps and especially stockpiles, the method is used to good effect. A tacheometric survey requires a graduated tacheometric staff and a telescope for taking readings from the staff at distance. The telescope forms an integral part of the theodolite or tacheometer, which is an instrument used for the measurement of angles in both horizontal and vertical planes.

The tacheometric survey of a dump or stockpile is carried out by setting up the theodolite at a suitable survey station and observing positions of the staff at a sufficient number of points on the dump surface, so that when the co-ordinates and elevations of these points have been calculated and plotted, a contour plan of the dump may be compiled. Volumes of dumps or

stockpiles are deduced by the construction of sections through the dump at regular intervals. Sections may be transverse, longitudinal or horizontal, and the area of each section is accurately determined by planimeter and substituted in one of the following formulae to obtain the volume:

i) Trapezoidal Rule

$$V = D/2\,(A + 2S + B), \qquad (12.1)$$

where D is the regular interval between sections, A and B are end areas, and S is the sum of intermediate areas.

ii) Simpson's Rule

$$V = D/3\ [\text{end areas} + 2(\text{odd areas}) + 4(\text{even areas})] \qquad (12.2)$$

The total number of areas must be odd and they must be at regular intervals of D units apart. It is advisable, when applying the above rules, to use both formulae and, if in reasonable agreement, accept the mean of the volumes.

The above rules have been derived from similar formulae used to obtain areas of irregular figures but have proved very effective in the above application (Dennis, 1974). The accuracy of plans and volumes derived by the methods described above will depend on the number of points observed, the number of sections drawn and the shape of the dump.

The use of electronic field books for capturing initial data, computer programs for the calculation of co-ordinates, elevations and volumes, and computer aided draughting for the compilation of plans, have greatly reduced the amount of time spent in the office on calculating and draughting.

12.3.2.2 *Electronic distance measuring*

The infrared distancer or distomat has simplified the measurement of distances in the field and eases considerably the task of the surveyor in the mapping of sand dumps and slimes dams. A number of different electronic distance measuring (E.D.M.) instruments are available, which can either be used independently, mounted on a theodolite, or as 'total stations' where the theodolite and distomat are constructed in a single unit with automatic recording of field data. As with tacheometry, detail is surveyed by observing distances and angles between a known survey station (beacon) and required points.

12.3.2.3 *Photogrammetry*

Aerial photogrammetry

Photogrammetric methods have a wide range of use in survey, mapping and the determination of volumes of slime and sand. Mapping from aerial photography has many advantages over conventional ground surveys, the most important being the speed and ease of carrying out the survey, and secondly the high degree of accuracy which can be attained. Photographs are taken from an aircraft flying in straight line parallel strips. Ground control surveys of strategic points, which are easily identifiable on the photographs, are carried out and form the link between the ground survey system and the stereoscopic model in the plotter. The stereoscopic plotter

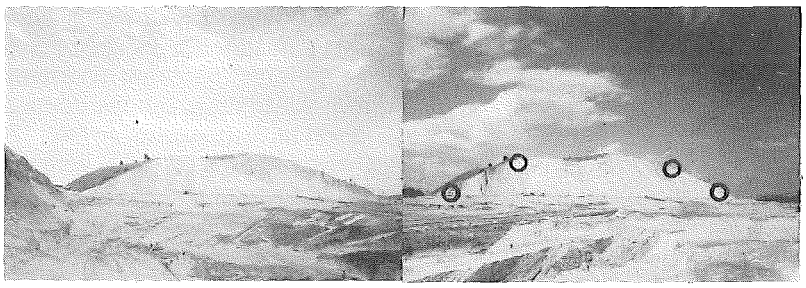

Figure 12.3. (Upper photographs) Terrestrial photogrammetry: pair of stereoscopic photographs showing working dump face and 'ringed' survey points.
(Lower plan) Contour plan of the working dump face compiled from the pair of photographs.
Note the unmapped area due to the loss of stereoscopy where a minor 'sand-slide' occurred during the time lapse between taking the two photographs.

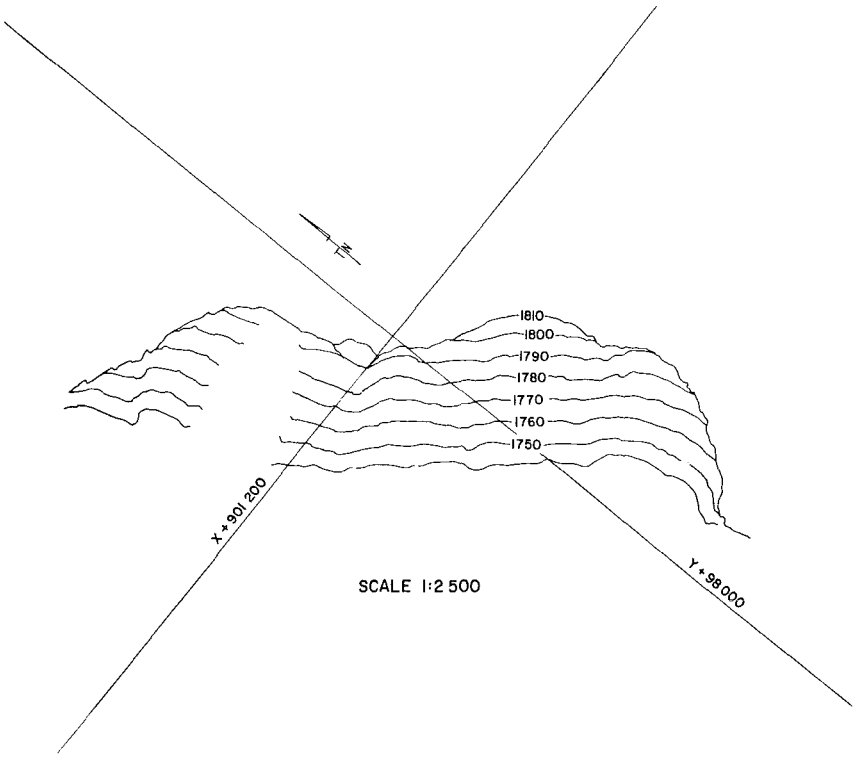

is used to compile an accurate contour plan of the dam or dump and, in addition, can produce a digital terrain model (D.T.M.). The value of accurate contour plans to the metallurgist to ensure optimum planning in conveyor, pipe and drainage layout requires no further elaboration, but the many uses of the D.T.M. are fairly new concepts and will be discussed more fully later.

A convenient scale for the mapping of residues is 1:1 000, with a one metre contour interval where, for standard photogrammetric procedures, the scale of photography will be between 1:6 000 and 1:8 500. Should a two-metre contour interval suffice for any particular mapping requirement, photography to a scale of 1:10 000 can be used for 1:1 000 mapping. It should be noted that contour lines on a plan are generally accurate to within half of the contour interval.

Useful visual information can be obtained from photographic mosaics, which are aerial photographs pieced together, re-photographed and enlarged. As distortion will be present, especially towards the edge of an aerial photograph, the scale of these mosaics can at best only be considered approximate.

Terrestrial photogrammetry

For this survey the camera is on the ground and not in an aircraft. The requirements of the photographs are similar to those for aerial photography in that ground control survey points are required once again to establish the relationship between ground detail and the photographic model in the stereoplotter. The co-ordinates and elevations of a number (dependent on the size of dump or dam) of well-selected targets, easily identifiable on the photographs, are determined by theodolite and E.D.M. (distomat) methods. The points over which the camera is positioned are similarly ascertained. This information, together with the photographs, is used to compile a plan view of the working dump/dam face.

Volumes and values of residues

Successive photographs are taken at intervals determined by demand, and as the latest analytical stereoplotters can accommodate a number of stereomodels at any one time, it is comparatively simple to compile a plan of two or more face positions including the intervening ground contours. A D.T.M. of this mapped area is generated and can be integrated with the D.T.M. of the original aerial survey. In addition, the borehole data and values are added to this database and a statistical value distribution of the entire dump/dam is completed. From this information the volume and value of sand or slime removed between successive surveys, as well as the recovery grade, are calculated and compared with actual results as obtained by the metallurgist during routine sampling and volumetric surveys.

Future planning in the recycling of residues

The computer-aided system described above is now used in the forecasting of tonnages and values, either monthly for short term, or annually for long term planning. Volumes and values are computed for any given tonnage to

be processed in the plant. Where the facility to blend grades from different sources exists, various simulations are carried out on the computer, giving the metallurgist the opportunity to choose the sequence best suited to his requirements. Reports on the simulated removal of slime and sand, giving the tonnages and values expected, are produced, as well as plans depicting the rate of advance of all working faces.

The exploitation of residues is a relatively new industry and undoubtedly the means and methods described in this chapter will be continually improved and implemented.

12.4 Sand/Slime Retreatment Operations

The increase in the price of uranium in the early 1970's led to the construction of plants at a number of existing gold mines to retreat accumulated residues for the production of uranium. The 1970's also saw the first of a number of independent retreatment operations come on stream for the recovery of gold, uranium and pyrite. One of the first of these new plants was installed at the Blyvooruitzicht Gold Mine for the recovery of uranium from accumulated gold plant tailings. This plant, which was commissioned in July 1977 and closed down in 1984, incorporated several novel features, including dry reclamation of the tailings by means of a bucket-wheel excavator, the first CCD (counter-current decantation) circuit to be used in place of filters in South Africa, and the first NIMCIX continuous ion exchange circuit in a uranium plant.

This plant was followed by the Chemwes uranium plant, which was built to recover uranium from old slimes dams at Stilfontein and Buffelsfontein and later by a similar plant at Merriespruit to treat both current and reclaimed slimes. Liquid/solid separation was accomplished on belt filters at both of these plants; other unit processes were similar to those employed at Blyvooruitzicht.

South Africa's largest reclamation operations are at ERGO (East Rand Gold and Uranium Company Limited), which was commissioned in 1977 on the far East Rand and in Welkom, in the Orange Free State, where the Joint Metallurgical Scheme has been operating since 1977. ERGO presently reclaims about 1,6 million tons a month of old slimes dam material for processing to recover gold, uranium and pyrite. In 1985, ERGO commissioned a 1,5 million tons per month carbon-in-leach (CIL) plant to recover gold from the current flotation plant tailings. ERGO is to commission an additional one million tons per month CIL plant in 1986 at the old East Daggafontein mine site. This plant will process those dams that are more amenable to direct CIL treatment than to treatment in the flotation-CIL process of the original ERGO plant. Tailings reserves for this operation include the flotation plant tailings generated in the original ERGO plant prior to the erection of the CIL circuit.

The Rand Mines Milling and Mining Company (RMMM) established a treatment plant at a site a few kilometres south west of central Johannesburg to reprocess 50 million tons of sand and 20 million tons of slime tailings derived mainly from the old Crown Mines. At the time of its commissioning in

1982, the plant, which was designed to treat 370 000 tons per month for the recovery of gold and pyrite, included the largest CIP circuit yet built (Laxen and Brown, 1984). A similar plant is to be commissioned by RMMM early in 1987 at the old City Deep mine. Approximately 42 million tons of tailings, largely sand, will be reprocessed.

The first of the large reclamation operations is the Joint Metallurgical Scheme (JMS), which is an arrangement amongst those gold mines in the Orange Free State administered by the Anglo American Corporation of South Africa (AAC). By means of this arrangement, gold plant residues are retreated in a number of flotation plants for the production of gold, uranium and sulphuric acid from pyrite concentrates, and directly for uranium production.

There are a number of smaller retreatment operations on both the East and West Rand. Egoli, a company which is less well known than the larger South African mining houses, owns in excess of 70 million tons of surface material on the East Rand. At Modderfontein 74, some 55 000 tons per month of sand and slime are being reprocessed in a plant which incorporates one of South Africa's earliest carbon-in-pulp circuits. This company also operates a plant on the West Rand, retreating sand from several old Randfontein Estates dumps (Anonymous, 1982). Village Main, one of the best known mines on the central Witwatersrand, would have been forced to close down had it not embarked on retreatment of accumulated surface residues. In the eastern Transvaal, the Fairview mine reclaims and treats some 25 000 tons per month of accumulated flotation tailings.

Descriptions of reclamation procedures and outlines of subsequent treatment of reclaimed residues at some of these operations now follow.

12.4.1 Slime reclamation at Blyvooruitzicht Gold Mine

Hydraulic reclamation by means of high pressure water is the most commonly used method for slime reclamation. However, in cases where this method is undesirable or not permitted, for example in dolomitic areas such as Blyvooruitzicht where sink-hole formation is a danger, mechanical means must be used.

After examining several alternative mechanical reclamation systems, a bucket-wheel excavator was selected for slime recovery at Blyvooruitzicht. The system comprised a mobile excavator with its two integral transfer conveyors discharging onto a movable conveyor belt placed parallel to the face being worked. This conveyor fed a movable repulper. After repulping to the required relative density, the slurry was screened to remove unwanted oversize material including rocks, vegetation and timber contained in the dam, and then pumped to mechanically agitated surge tanks from where it was transferred to the plant.

12.4.1.1 *The Bucket-wheel excavator*

The excavator used was an Orenstein and Koppel Model SH 250 bucket-wheel excavator and consisted of a five-metre-diameter wheel fitted with 10 toothed buckets, each with a nominal capacity of 250 litres (Figure 12.4). The bucket-wheel deposited material onto a short conveyor belt which discharg-

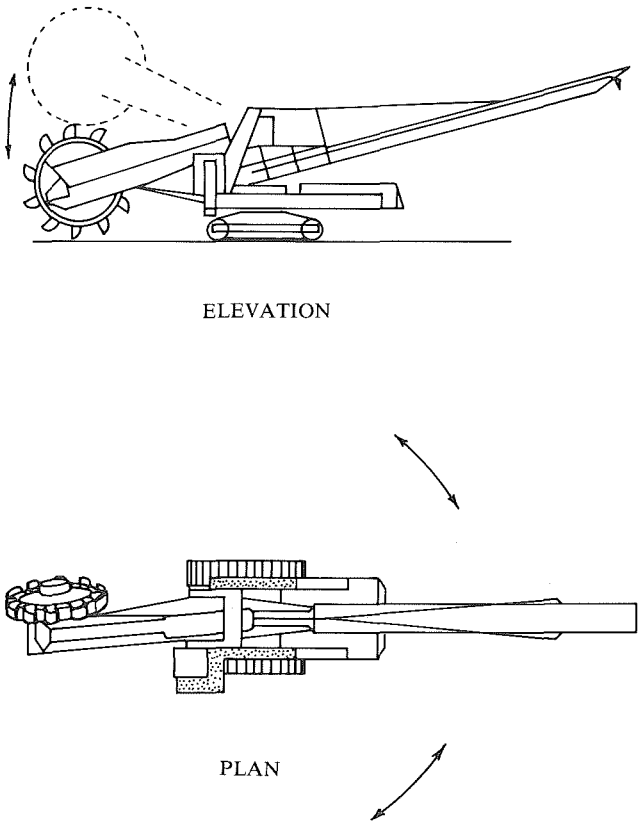

Figure 12.4. O & K SH 250 bucket-wheel excavator.

ed via a chute. The superstructure housing the bucket-wheel and its discharge conveyor could be slewed through 360 degrees. The chute discharged onto a second transfer conveyor which could be slewed through 180 degrees relative to the superstructure. The bucket-wheel and the rear transfer conveyor could move in both horizontal and vertical planes. The maximum digging height was 7,8 metres and the reach of the rear transfer belt was 15 metres. The excavator was mounted on metal crawler tracks and had a maximum travel speed of 20 metres per minute. The rear transfer conveyor was fitted with a nuclear belt weigher to enable the operator to control the digging rate.

The excavator was originally powered by two 130 kW, 8 cylinder diesel engines, which drove pumps to provide hydraulic power to all of the machine drives. However, excessive engine maintenance was required due to the dusty environment in which the machine operated, and the engines were subsequently replaced with a 261 kW electric motor.

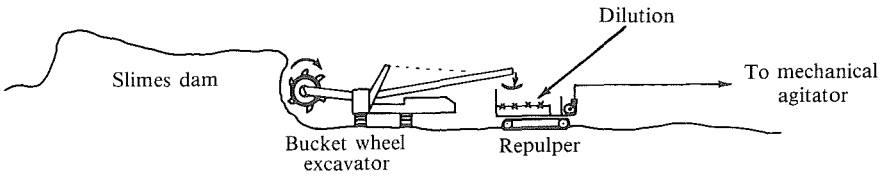

ELEVATION

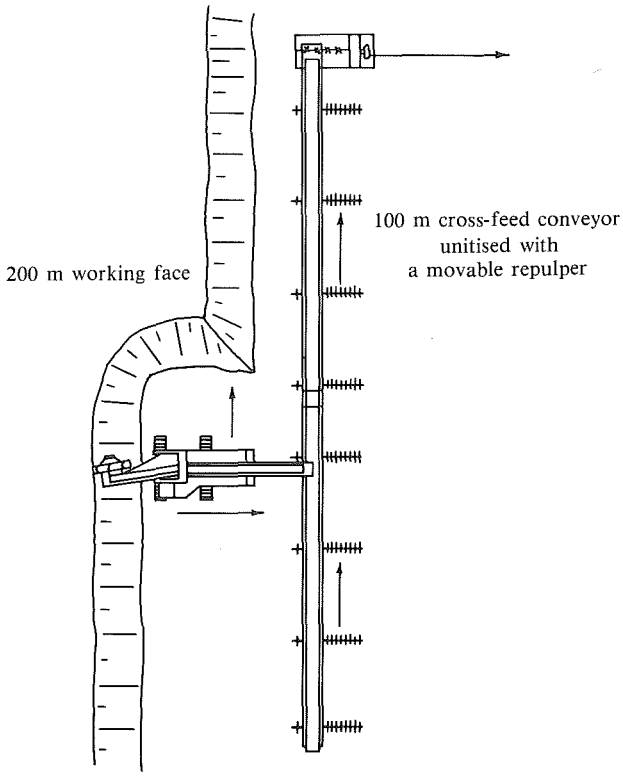

PLAN

Figure 12.5. Mode of operation of slimes dam reclamation at the Blyvooruitzicht Gold Mine.

12.4.1.2 *Repulper feed conveyor*
The repulper feed conveyor structure consisted of 10 metre sections joined by plates connected with swivel pins. Each section had a pair of motor-driven wheels at either end, running in heavy duty steel channel sections. The entire structure could be advanced toward the working face by single push-button operation of the wheel drives. The structure was aligned by advancing or reversing individual wheel drives. Advancing and repositioning of the repulper conveyor was an operation that took 2 to 4 hours. In practice, conveyors were installed on two working faces so that reclamation continued on one while the conveyor was advanced on the other.

12.4.1.3 *Repulper*
The repulper consisted of a 3,8 m x 2 m x 1,6 m rubber-lined trough. It was fitted with a horizontal stainless steel shaft carrying 72 blades. The shaft was driven by a 75 kW motor through a gearbox, and revolved at 20 rev/min. Semi-flexible repulper blades were found to be most effective in coping with oversize scrap, including stones, wire rope, timber, etc., contained in the dump. The blades consisted of 575 mm lengths of 30 mm diameter steel rope encased in rubber hose and sealed at both ends with an epoxy compound to protect the rope from the acidic corrosive effect of the repulping solution. The blades were clamped to the shaft in a spiral. Blade life was about three months. The repulper was mounted on crawler tracks and was towed into position by means of a tractor or front-end loader.

Repulped slime, at a controlled liquid:solid ratio, was pumped via a 200 mm diameter flexible pipe over stationary screens into surge/storage tanks adjacent to the reclamation site, prior to being pumped to the plant (Figure 12.5). A detailed description of the rest of the Blyvooruitzicht uranium plant is beyond the scope of this book. The unit processes employed are outlined in 12.4 above. The development of the process and a description of the unit operations involved have been described (Boydell, Laxen *et al.,* 1977).

After uranium extraction, the tailings were subjected to flotation, where a carboniferous/sulphidic concentrate, containing about 9,5 g Au/t was produced. This concentrate was treated for gold recovery in the existing gold circuit. The tailings treatment plant closed down in November 1984 when the accumulated tailings reserve was depleted.

12.4.2 Slime retreatment at ERGO
The ERGO division of the East Rand Gold and Uranium Company Limited will reclaim over forty slimes dams during its proposed life by monitoring the dams using high pressure water. Many of the slimes dams have been disposal sites for municipal refuse, abattoir effluents and sewage plant effluents, and over the years, to reduce air pollution, have been vegetated or clad with broken rock. The dams were built on ground of varying topography, ranging from flat sites to steep valleys. All of these factors influence reclamation and subsequent processing, and must be taken into account.

12.4.2.1 *Location of pump stations*
The correct location and elevation of pump stations is vital to subsequent smooth operations. Contours under the dam to be reclaimed are estimated using borehole data, 1 in 1 000 mapping with 1 m contours and larger scale mapping of the surrounding area. Once these contours have been drawn, the pump station is located adjacent to the wall with the lowest contour. Testwork at ERGO has shown that the pulped material will gravitate down an earth furrow with a slope of 1 in 150 (0,4°). This slope is a function of the size and shape of the particles and the density of the pulp. Based on this slope, a number of suitable sites for the pump station can be selected. It is necessary to check the elevations of possible sites for the pump station, since the cost of the pump station is approximately related to the cube of its depth. Cost exercises must be carried out to establish the optimum arrangement.

If only one pump station is required at the site, it is normally equipped with vibrating trash removal screens, the screened pulp then being pumped to either a booster station or direct to the treatment plant. The screens are required to remove oversize material which will cause pumping or pipeline problems. These are fitted with polyurethane decks with 3 mm x 12 mm slotted openings. Where more than one pump station is required, the main pump station (i.e. the pump station to which the greatest tonnage will gravitate) is usually a transfer station and the other pump stations are satellite stations. In a satellite station, the pulp gravitates directly into a small sump feeding an all-metal pump. Finger screens in the launder feeding the sump protect the pump from large rocks or other debris.. The pulp is then pumped via a rubber-lined pipe to vibrating screens situated in the transfer station.

At one dam the transfer station was built above ground with two satellite stations feeding onto the screens at the transfer station. This reduced the capital cost of the civil construction because of the depth that would have been necessary for a conventional below-ground transfer station. The velocity of pulp in the pipelines is maintained in the range 1,9 to 2,1 m/s. Details of pumping tests and the results of practical experience have been published (Sabbagha, 1982).

A catchment area is required downstream of the transfer sump to prevent pollution in the event of an overflow. In a number of cases, a main catchment area has been installed upstream of the pump station to which the pulp is diverted in the event of any breakdown or operational problem. A small downstream catchment area is then provided for any overflow from the transfer sump. Oxidation of pyrite in the dams causes a lowering of the *in situ* pH of the slime. In most cases, the reduction of pH is not sufficient to warrant measures to prevent pipeline corrosion, but a facility for lime addition is installed where considered necessary.

12.4.2.2 *Reclamation operations*
Prior to reclamation of a dam, borehole samples are drilled on a 100 metre grid. These samples are assayed and the distribution of values deduced from the results. In addition, an aerial survey of the dam is carried out and a volumetric estimate of the dam is made on a 50 metre grid. Each quarter,

the aerial survey is repeated and this has been found to be an accurate, quick and cost effective method of calculating the volume of the dam remnants. Various tests have been carried out to establish an *in situ* dry bulk density of the slimes, and a figure of 1,473 t/m^3 is currently used.

The monitor guns used are similar to those used by the English China Clay Company. They are water nozzles constructed with a curved inlet and a swivel bearing in such a way that the reaction thrust of the water jet is balanced. The design of the curved inlet is critical to ensure the stability of the gun irrespective of the direction of the water jet. The water pressure at the gun is maintained at about 2 000 kPa. The water velocity leaving the gun is of the order of 45 m/s. The liquid:solid ratio of the pulp obtained from the monitoring operation varies between 0,89 and 1,21 and a procedure has been established which ensures that a fairly consistent density is produced.

At ERGO, the full height of the dam is monitored, whereas at some other operations a benching method is used, where approximately four metre layers of the dam are monitored, with the slurry gravitating between benches. The advantage of benching is that the pump stations do not have to be deep in the ground to reclaim the majority of the dam. The gun can be set up very close to the face and the full force of the water can be used, thereby giving higher pulp densities. However, the final clean-up of the dam to natural ground level will require either the transfer station to be sited at the correct elevation or portable satellite stations to be used.

In order to minimise final ground clean-up costs at ERGO, the slimes dams are monitored downslope to ensure that ground once cleared is not re-covered with slimes in the event of a breakdown or stoppage at the transfer station. The downslope method of reclamation also offers a benefit with respect to rain water control, since rain water on the previously cleared sections of the dam can be routed away from the pulp launders. Final clean-up can be carried out by a number of means as the face of the dam advances. It has been found that routine mechanical clean-up is more cost effective than a final mechanical clean-up once the dam has been removed.

Experiments on the automation of the operation of the monitor guns are being undertaken and a sweep action for its operation during absence of personnel has been installed. Further work using television cameras at each gun with one operator at a central control room, and programmable guns that will operate to a set programme for a period of time, are being considered.

Three slimes dams are worked at any one time. Each of these dams is monitored at a reclamation rate of about 550 000 tons per month, providing a total plant feed of about 1,65 million tons per month. A fourth supplementary dam is available when necessary to provide a higher sulphur grade in the feed, to ensure that sufficient pyrite of a suitable grade is available to the acid plant. After monitoring, and screening to remove trash, the pulp is pumped in three separate streams in 450 mm diameter pipes to a main booster station for pumping to the flotation section of the central plant complex.

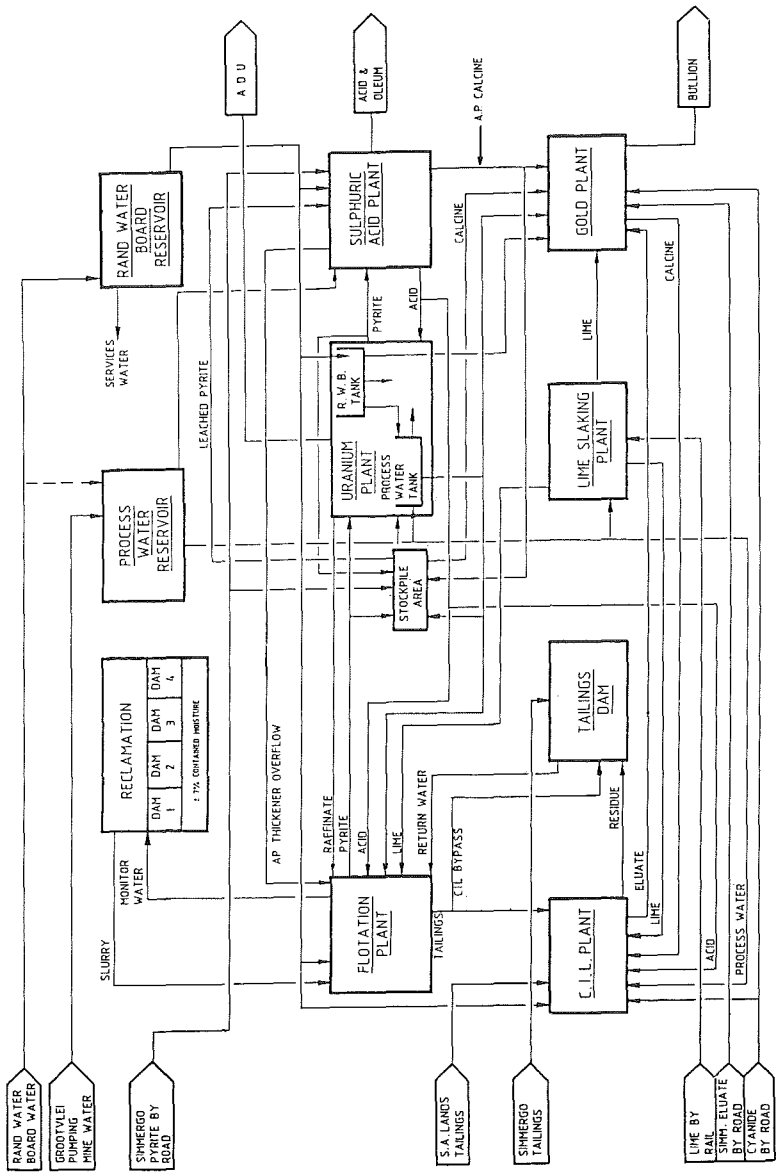

Figure 12.6. General ERGO Complex flowsheet.

12.4.2.3 *Processing at ERGO*

A general plant flowsheet is presented in Figure 12.6. Slurry from the three slimes dams is treated in three separate circuits in the flotation plant to accommodate any differences in flotation characteristics that may exist among the slimes dams. The slurry is first diluted to the required liquid:solid ratio and the flotation reagents added. A pyrite concentrate, containing a portion of the gold and uranium, is floated. The tailings from the flotation cells is thickened in four 138 metre diameter thickeners.

The overflow from the thickeners is recirculated to reclamation. The thickened underflow is pumped to the carbon-in-leach (CIL) plant, where it is first screened to remove coarse sand to prevent plugging of the interstage screens downstream. Screen oversize is milled in a ball mill before being returned to circuit ahead of the desanding screens. The slurry is pumped to a series of mechanically agitated contactors, where calcium cyanide is added. The contactors contain activated carbon granules which are kept agitated in the slurry and which adsorb the gold dissolved by the cyanide. The carbon is moved counter-current to the slurry flow, ensuring low levels of dissolved gold in the tailings. Carbon loaded with gold is separated from pulp, which is pumped periodically from the first contactor; the carbon is stripped of its gold content in the elution section using the AARL elution procedure. Eluted carbon is thermally regenerated and returned to circuit while the gold-rich eluate is pumped to the gold plant for gold recovery. Slurry tailings from the CIL plant are pumped to the tailings dam, situated 11 km to the south of the processing plant, where the coarser fraction is separated by cyclones for construction of the dam walls.

The pyrite concentrate from the flotation plant is thickened and transferred to air-agitated pachucas where uranium is extracted using sulphuric acid. The leached slurry, now containing uranium in solution, is filtered on drum filters. The filter cake is re-slurried to 70% solids and pumped to the acid plant. The uranium-bearing pregnant solution is clarified and then processed in a solvent extraction plant, where the uranium is purified and concentrated. Uranium is precipitated from the resulting uranium-rich liquor as ammonium diuranate (ADU) by addition of ammonia. The ADU slurry is sent to the Nuclear Fuels Corporation of South Africa (Nufcor) plant for filtration, drying and calcining to uranium oxide concentrate prior to export.

The leached pyrite from the uranium plant is fed into three fluid bed roasters. The sulphur dioxide off-gas from the roasters is fed into two Lurgi double contact acid plants. The total production capacity of the two plants is 1 500 tons of acid per day. Part of the smaller plant's production is in the form of oleum (fuming sulphuric acid) for sale to the explosives industry. The calcine from the acid plant fluid bed roasters is quenched with water, thickened and transferred to a cyanidation plant similar to those used on all major South African gold mines. After being milled in one of two ball mills, the calcine is pumped to air-agitated Browns tanks where the gold is leached from the calcine using a sodium cyanide solution. The calcine from the cyanide leach tanks is filtered and the filter residue pumped to a tailings dam.

The gold in the filtrate is precipitated from the solution by the addition of powdered zinc. This precipitate is filtered and the zinc-gold filter cake calcined and smelted in an electric arc furnace. The resultant gold bullion bars are sent to the Rand Refinery for final refining.

12.4.3 Sand and slime retreatment at Rand Mines Milling and Mining

Tailings were first reclaimed at Crown Mines during the early 1970's to supplement the feed to the old plant when underground mining operations were being run down. However, the lower grade of this material and the limited rate of throughput imposed by plant capacity made total substitution an uneconomic proposition using this process route.

Following the introduction and operation of a free market for gold in the early 1970's, the potential of the accumulated tailings at Crown Mines was re-evaluated. The result of these investigations was the decision to erect the Rand Mines Milling and Mining (RM3) dump retreatment plant on a site on the Crown Mines property central to the dumps intended for retreatment. The primary function of the plant is to recover gold from the accumulated residues, with pyrite as a by-product, and with the added benefit that land will be released for future development.

Removal of the pyrite will remove a significant source of acid pollution of the surface water on the Central Rand. The plant was designed to process 370 000 tons per month of accumulated residue made up from 324 000 tons per month of sand and 46 000 tons per month of slime. Construction began in June 1980 and commissioning on slime in February 1982. The commissioning of the milling circuit on sand commenced in April 1982. By early 1984 tonnage throughput had increased to a monthly average of 450 000 tons.

12.4.3.1 *Process development for sand treatment*

The flowsheet shown in Figure 12.7 was evolved from laboratory and pilot plant testwork. The minus 75 μm fraction in the sand contains a significant proportion of the total gold content and reacts favourably to direct cyanidation. This indicated that a classification stage would immediately yield a product which could be processed for gold recovery. As fine screening at high tonnage feed rates was not a well established process, the application of hydraulic classification was investigated and proved to be successful in separating a proportion of this fine gold bearing material.

The pulp generated by mixing sand and water has a low pH. It was found that the settlement of the fines produced by hydraulic classification was superior at low pH to that obtained in tests conducted at the more conventional gold plant pH of about 11. It was concluded that thickening could be used as a means of recovering solids from the dilute suspension resulting from hydraulic classification. The low pH and the presence of a pyritic fraction in the sands suggested the possible application of flotation for separation of the sulphides. That this was feasible was confirmed in laboratory and pilot plant tests, and sulphur recoveries in excess of 85% were achieved.

As gold was also recovered in the sulphide concentrate, the gold content of the tailings from flotation was lower than the original head value.

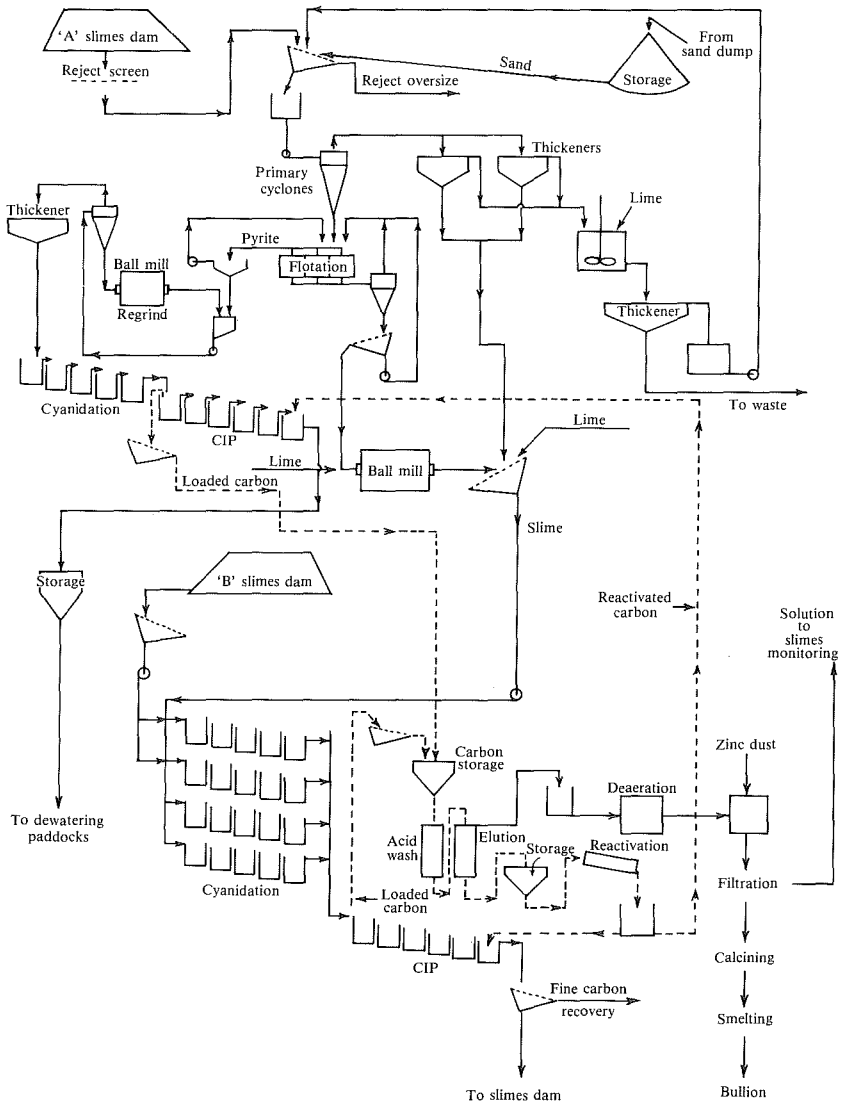

Figure 12.7. RMMM Plant flowsheet.

Leaching tests carried out on the tailing over a range of grinds established that it was unnecessary to grind the float tailing any finer than 45% passing 75 μm. It was observed, however, that dissolution from the fraction coarser than 150 μm was poor. As a fine grind was not required it was considered that closed circuit grinding would be unnecessary, and tests conducted on a 1,68 metre diameter ball mill indicated it was feasible to satisfy these criteria

in an open milling circuit. Having achieved the size reduction and established the leaching parameters for these materials, it was suspected that conventional air agitated vessels could prove unsuitable for continuous process application, as the coarse particles might settle out. Tests were conducted in mechanically agitated tanks and their metallurgical efficiency and the suspension of the coarse solids were found to be satisfactory.

Whilst all testwork on leaching included filtration, the cost of a filtration installation for the tonnage throughput rate would have been high and mechanical problems could be anticipated in suspending the coarse material in the feed hoppers. The potential of the carbon-in-pulp (CIP) process was evaluated and the decision was taken to follow this route.

12.4.3.2 *Reclamation operations*

As noted above, two forms of feed materials are recovered for treatment, the one being described as *sand* and the other as *slime*. The mineralogical composition of these materials is similar, the difference arising mainly from their different particle size distributions.

Slime

This is reclaimed by conventional hydraulic methods with high pressure monitors using water from various sources, including return dam solutions, and operating at a discharge pressure of 1 600 to 2 000 kPa. The pulp flows by gravity to a flat deck vibrating screen fitted with 0,5 mm x 12 mm slotted polyurethane panels for the removal of tramp materials such as oversize particles and vegetation. The underflow of the screen is pumped to the sievebend screens at the processing plant and the oversize is rejected to waste.

The design pulp liquid:solid ratio is 1,00, but in the early stages of operation this varied widely. Current operations are much more stable despite the throughput rate having increased to a level in excess of 60 000 tons per month from the original design capacity of 46 000 tons per month.

Sand

The material is reclaimed with front-end loaders. The concept of this method of reclamation is simple, but practical difficulties have arisen due to a variety of factors which had not been anticipated. The dumps have been used in the past for disposal of all sorts of refuse. Metallic scrap in the form of drill steel, rails and metal sleepers has been a major cause of belt damage, and coarse rock and vegetation has caused blocked chutes and damage to plant equipment when introduced to the system, resulting in operating problems, delays and additional cost.

Reclamation is further complicated by the nature of the deposit, where alternating layers of sand and slime do not provide the stable footing required for the equipment. In addition, the angle of repose of the working face has proved to be variable and is relatively unstable, resulting in hazardous conditions when reclaiming only from the base of the dump (Figure 12.8 a and b). Testwork is in progress to assess the effectiveness of profiling the working faces with water sprays, which should serve the dual purpose

of dust abatement and stabilisation of the face. Where possible the intermediate layers of slime are reclaimed by conventional hydraulic methods.

The material reclaimed by the prime movers is fed to movable hoppers fitted with grizzly bars and vibrating feeders which feed onto conveyor belt systems, which transport the sand to the stockpile at the plant. The stockpile is circular and material is reclaimed from it by means of a scraping chain conveyor feeding a draw-down chute onto the feed belt to the screens ahead of the process.

12.4.3.3 *Plant operations*

Sand preparation

Sand reclaimed from the stockpile is fed by conveyor to a coarse scalping screen, fitted with 3 mm x 19 mm slotted polyurethane panels and washing sprays. The liquid:solid ratio of the minus 3 mm material is adjusted to 1,7 and the resulting pulp is pumped to a four-way distributor which feeds the primary cyclones. The overflow from the cyclones is fed by gravity to two 15 m diameter acid duty thickeners. The underflow is fed to mechanically agitated primary conditioners prior to flotation. The pyrite concentrate from flotation is collected in a 10 m diameter acid duty thickener. The thickener underflow is fed to the discharge sump of a 1,68 m diameter ball mill in closed circuit with a hydrocyclone. The overflow of this hydrocyclone reports to a 25 m diameter thickener.

The flotation tailings are classified in hydrocyclones. The sand underflow is dewatered to about 18% moisture on dewatering screens and is then distributed to four 3,66 m diameter by 6,71 m ball mills operating in open circuit. The hydrocyclone overflows and the underflow from the dewatering screens are distributed to the primary float conditioner and the flotation tailings sump for dilution control, and to the two 15 m acid duty fines thickeners. A feed of alkaline return dam solution and lime is added to the dewatering screen overflow at the mill inlet for density control and protective alkalinity. Thickened fines from the 15 m thickeners join the mill discharge, which is fed onto 0,5 mm x 11 mm slotted screens at the mill outlet. A transfer pump then conveys the pulp to a leach circuit.

Leach and CIP

Leaching of the milled sand/slime pulp is carried out in parallel in four rows of agitators fitted with draft tubes. The tanks are 8 m in diameter by 16 m high. The first stage of each row is currently used as a preconditioner. Calcium cyanide is added to the second stage. At this point, partially loaded carbon is also introduced by transfer of pulp and carbon from the adsorption section by means of vertical spindle pumps. This is a recent innovation, effectively converting the leaching section into a co-current CIL system. Air is introduced at a point close to the bottom of all the leach tanks. The leached pulp flows by gravity to the feed box ahead of the CIP adsorption tanks where the four leach streams combine. Air-swept static screens retain the loaded carbon in the last stage leach vessels.

The six 8 m diameter by 16 m adsorption contactors of the CIP plant

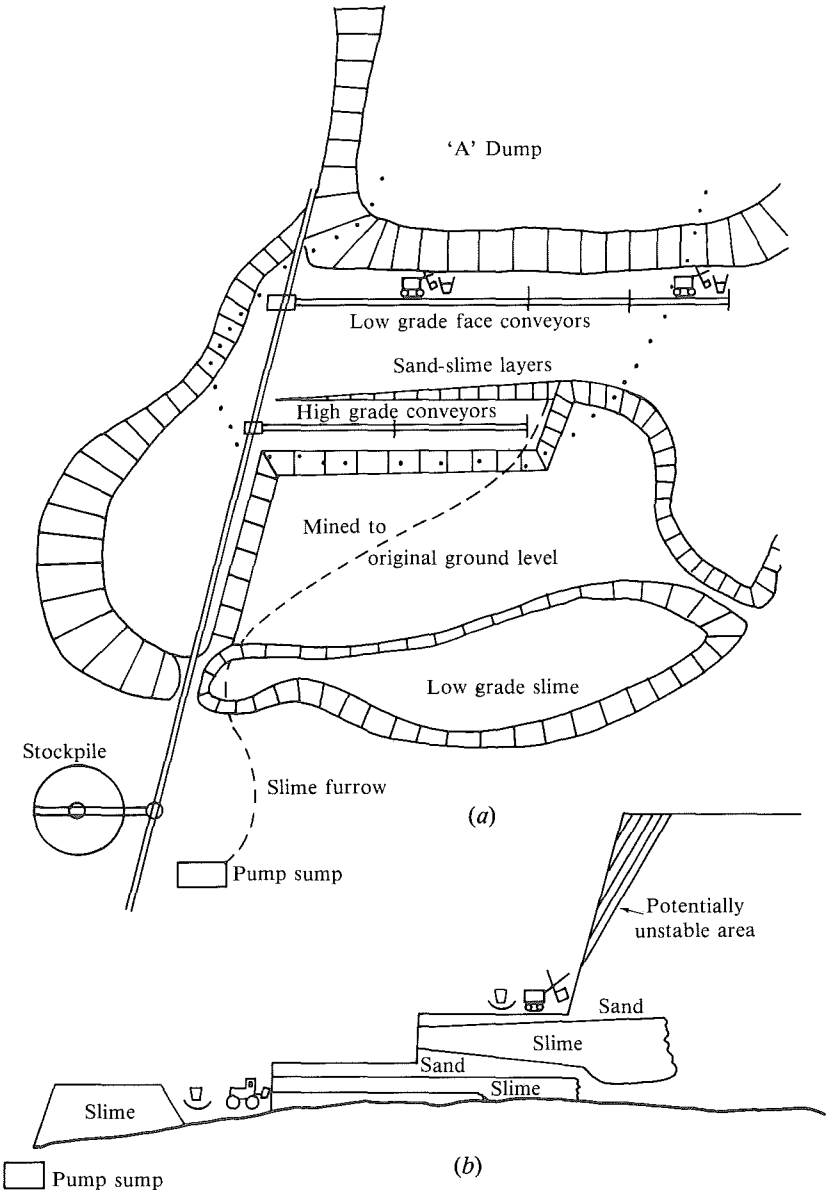

Figure 12.8 *a*, Plan of reclamation *b*, Elevation of reclamation.

are also fitted with draft tube agitators and have a variety of interstage, air-swept screens to retain the carbon whilst the pulp flows through the system by gravity. The carbon is moved counter-current to the flow of the pulp by means of submerged vertical spindle pumps. The pulp leaving the final adsorption stage is screened to recover fine carbon and then pumped to residue dams which are approximately 7 km from the plant.

There are other feeds to the plant. Material from the monitoring of slimes dams, after trash removal by means of sievebend screens situated above the preconditioning tanks, may either be fed directly to the preconditioning stage of the leaching circuit, or to the mill discharge screens. Slime found underlying the sand is also monitored and may be introduced either directly to the leaching circuit or to the screen house.

Concentrate

The milled flotation concentrate is pumped from the 25 m thickener via a mechanically agitated surge tank to a five stage leach circuit where lime and cyanide are added. The leached concentrate is screened on a high frequency inclined vibrating screen of 0,75 mm aperture, the overflow of which is discarded and the underflow fed to the eight stage concentrate adsorption section. As in the main plant, the adsorption tanks are fitted with vertical air swept screens and the pulp flows by gravity whilst the carbon is moved counter-currently. Discharge from the CIP plant is screened to collect escaping carbon and is then pumped to settlement paddocks for drying prior to shipment to acid plant operations. The supernatant water is decanted and returned to circuit to recover dissolved gold losses.

Gold recovery

Loaded carbon is removed from the last CIL stage (main circuit), or from the No. 1 adsorption contactor in the pyrite circuit onto external circular vibrating screens. The underflow from the screens is returned to the appropriate adsorption/leach stage. The loaded carbon is transferred hydraulically to columns where it is subjected to a hot acid wash with dilute hydrochloric acid, rinsed and then transferred hydraulically to the elution columns. It is then contacted with a caustic/cyanide solution at temperatures up to 120°C and rinsed with water. The resulting eluate is collected, de-aerated by vacuum and the gold is recovered conventionally by zinc dust precipitation, filtration, calcining and smelting to bullion. The post-precipitation tailings solution is returned to the adsorption section.

The eluted carbon is recycled to the final stage contactor of the main adsorption circuit via any one of the following three routes: direct hydraulic transport, via rotary kiln regeneration, or via Rintoul kiln regeneration.

New activated carbon is added to the adsorption circuit manually to make up for losses. Only fresh carbon is used in the concentrate adsorption circuit.

Solution balance
Three sources of water are available to the plant:

a) Rand Water Board - for make-up, to feed the CIP processing section and for gland service.
b) Return dam solution - for mill dilution and the slimes reclamation monitors.
c) River water - used as make up on the acid side of the circuit and for applications such as hosing and flushing.

Internal water recycling
The overflow from the 15 m acid thickeners is pumped to a 40 m water treatment thickener where the acid solution is contacted with lime to precipitate metal salts as their hydrated oxides. The overflow recirculates, via a storage tank, to the acid side of the circuit to be used, for example, as dilution at the screen house. The underflow from this thickener is pumped to the residue surge tank and can, if assay values of the solids in the underflow demand it, be pumped to the main leach circuit via the mill transfer pumps.

Problems encountered in plant operations
Metal scrap and rocks in the sand feeds can block the screen-house feed chute and damage the screen decking. Also, if the fines content of these feeds increases, they can form a cake on the screen, which causes overloading and damage to the screen support and drive mechanism.

The performance of the flotation section has not matched the predictions for sulphur recovery. A number of possible explanations exist to account for this:

- lack of pH control in the 40 m thickener circuit, which causes the pH of the water to rise;
- mechanical conditions within the flotation circuit, i.e. inefficient froth removal;
- the addition of surplus return dam solution to the acid water circuit, which thus may contain cyanide, a known depressant for pyrite.

The establishment of stability in the sécondary cyclone (dewatering) circuit proved to be a major obstacle in tonnage throughput; however, this has been solved by the following actions:

- false bottoms were installed in the pump sumps to minimise the consequences of sand build-up and slumping;
- the vortex finders in the hydrocyclones were reduced in diameter.

The 3,66 m diameter by 6,71 m mills were originally installed with grate and scoop discharge ends and metal shell liners. High steel consumptions were encountered as well as massive deformation of the shell linings. A rubber lining was tested in one mill but did not prove to be cost effective. One mill was converted to an overflow configuration and fitted with a different design of rubber lining, and both steel consumption and liner life improved. All

mills have now been converted to an overflow configuration and the reduction in steel consumption has been maintained. The deformation of steel lining systems also appears to have been eliminated.

The conversion of the first stage leach tank in each bank to a preconditioner is a consequence of the observation that feeds other than milled flotation tails were high lime, cyanide and oxygen consumers. The move has been partially successful in that cyanide consumption has been reduced, but lime consumption continues to fluctuate and saturation oxygen levels have only been achieved in the leach by the use of liquid oxygen. Whilst CIP is dealt with in detail elsewhere in this volume, some of the problems encountered in the application of this technique at RM3 deserve mention here. The capacity of interstage screens and their response to fluctuations in flow rate continues to be a problem. The basic cause of this is believed to be contaminants such as fibre and near mesh size siliceous particles which blind the screens. The introduction of these contaminants to the carbon processing section also causes problems with the screens inside the elution column and can possibly cause interference with the carbon regeneration, particularly in the resistive heating furnace. An additional contaminant to the circuit is tramp carbonaceous material which is similar in appearance to activated carbon. This, it is believed, distorts the carbon concentration profile in the adsorption train and the loaded carbon values.

In order to remove as much as possible of these contaminants, a sievebend screening system was installed above the leach tanks of the main leaching section.

Plant performance

Present plant throughput is about 440 000 tons per month and extraction efficiency is running between 65 and 73%. Steel consumption is approximately 1 kg/ton of sand feed and power consumption by the mills approximately 8 kWh/ton sand feed. As mentioned previously, lime consumption fluctuates, but is of the order of 7 kg/ton treated, whilst cyanide consumption is 400 g/ton treated. Water recovery from the slimes dams is currently estimated to be between 30 and 35% of water fed to the dams.

12.4.4 The Anglo American Corporation Joint Metallurgical Scheme

The Joint Metallurgical Scheme (JMS) is an arrangement amongst the gold mines in the Orange Free State (OFS), administered by the Anglo American Corporation of South Africa Limited (AAC), to retreat gold plant residues for the production of gold, uranium oxide and sulphuric acid. In summary, gold plant residues, either current or reclaimed from slimes dams, are treated in three flotation plants at Free State Geduld Mines Limited, President Brand Gold Mining Company Limited and President Steyn Gold Mining Company Limited (Figure 12.9). The pyrite concentrates are transported to a central metallurgical complex at President Brand, where they are treated for the production of uranium oxide and roasted for the production of sulphuric acid with the calcines being treated for gold. The tailings from the President Brand flotation plant are further treated in the uranium plant at President Brand.

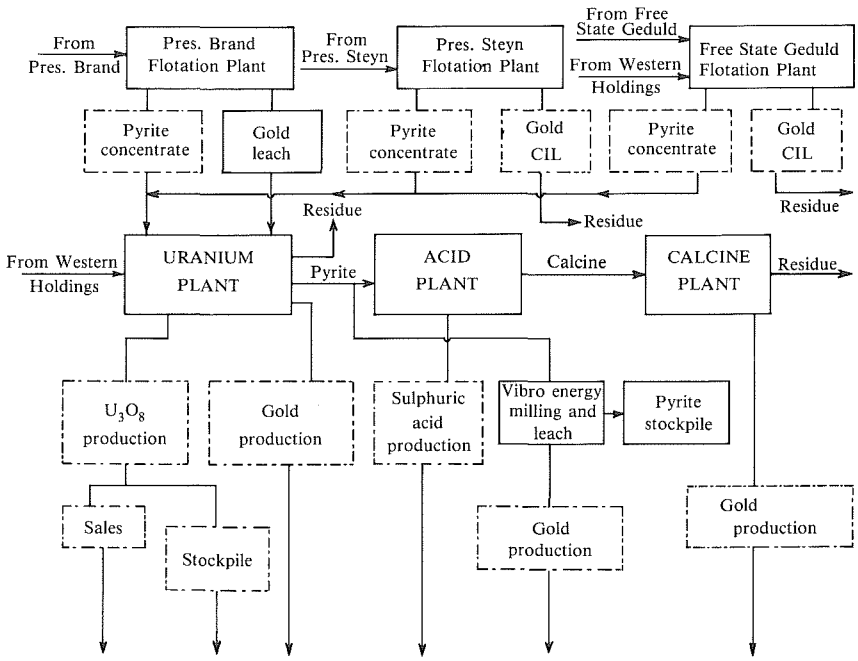

Figure 12.9. The JMS Metallurgical Complex.

12.4.4.1 *Historical overview*

In the 1950's, shortly after the start of mining operations in the Orange Free State, two uranium plants were brought into operation. Production was discontinued in the sixties as a result of weak markets. However, in anticipation of an upturn in the market, a 180 000 tons per month uranium plant was constructed at President Brand in the late sixties. In the event it became necessary to mothball the plant until 1976, when the uranium market eventually firmed.

At that time it was decided not only to commission the uranium plant, but also to produce sulphuric acid and gold from residues. In order to take full advantage of potential feedstocks owned by various AAC mines, the JMS came into being on 1 January 1977. Essentially, the JMS is a financial arrangement between participants in a joint venture whereby mineral recoveries, operating costs and service charges (paid by plant users to plant owners for amortisation purposes) are allocated among the participants. Initially emphasis was placed on uranium production and a major plant expansion took place in 1980, when slimes treatment capacity was increased to 500 000 tons per month with the construction of a counter-current decantation thickener circuit and a larger (1 700 m^3/h) solvent extraction plant.

However, with yet another downturn in the uranium market in the early 1980's, the emphasis was changed to maximise gold production whilst reducing uranium production.

12.4.4.2 *Feed sources*

Prior to 1982, the uranium plant and the three flotation plants had independent feed sources, with the uranium plant residues being stored for future flotation campaigns. However, it was decided in 1982 that the uranium plant should be fed with flotation tailings, which, besides being simpler, satisfied the objectives of maximising gold recovery and minimising the cost of uranium production.

Originally, the uranium plant residue had been a flotation plant feed source, but entrained solvent in the slurry significantly reduced gold recovery. Uranium plant residues were subsequently stored on a slimes dam, and it is not yet known whether the depressing effect of the solvent will persist after ageing. However, the effect of solvent has now been completely negated by the present practice of flotation before treatment for uranium.

When the JMS was started some of the flotation feed was current gold plant residue. However, residual cyanide in this material severely depressed pyrite flotation, and since much of the residual gold is associated with the pyrite, gold recovery was below expectations. While it is possible to overcome the depressing effect of the cyanide by long conditioning with acid, it was decided to concentrate efforts on reclaimed slimes. Also, the mineral content of the reclaimed slime is higher than that of current material. The slime is reclaimed from slimes dams constructed by the conventional ring dyke method. Grade and size distribution variations between walls and ponds are noticeable but these do not affect the flotation process significantly. Reclamation is by means of hydraulic sluicing using Tourell monitoring guns operating at a water pressure up to 3 500 kPa. A successful reclamation campaign requires careful planning. The most important factors are the position and elevation of the pulp pump station(s). These should be located so that the pulp can gravitate from the operating faces. A practical minimum design slope to obtain adequate pulp flow is 1:150. In the case of large dams located on flat terrain, extensive pumping from movable satellite stations becomes necessary. Most of the OFS dams are free from vegetation and dumped rubbish and consequently only basic screening is required. The surface areas of slimes dams can be up to 200 hectares and as these form natural catchments for rainfall, facilities must be provided for the diversion of stormwater.

Efficient monitoring practices have been developed by the mines together with their slimes dams contractors. Benches about four metres high are developed which allow the monitoring guns to operate close to the face. High impact velocities are thus maintained which maximise pulp density. It has been found preferable to use small lightweight monitoring guns mounted on wheeled supports which can be manhandled into position. This enables small-bore water piping (100 – 200 mm) with quick-fit couplings to be used, which facilitates handling whilst keeping line pressure losses to an acceptable level.

12.4.4.3 *Flotation plants*

The three flotation plants at Free State Geduld, President Brand and President Steyn have a combined capacity of 1,53 million tons per month. Reclaim-

ed slime is diluted to a liquid:solid ratio of 1,73 and then conditioned for at least four hours at the pH for flotation of 3,8 in air-agitated pachucas. In the case of President Brand, hot acidic effluent water from the sulphuric acid plant is available and has been found to be particularly beneficial, but on the other plants pH adjustment is made solely by means of concentrated sulphuric acid. Not only does the conditioning circuit provide surge capacity between the reclamation and flotation sections, thus permitting control of the feed rate to the rougher banks, it also allows for removal from the slime of acid soluble constituents such as lime added originally in the gold plants. Mechanically agitated conditioners were originally installed for intense conditioning with reagents but the high maintenance costs and the lack of measurable benefit have led to their elimination.

Reagents are continually evaluated both on the mines and at the Anglo American Research Laboratories (AARL) to evaluate new reagents on the market and to maintain process efficiency with changing feedstocks. Originally, yellow dextrin was used as a depressant for pyrophyllite, a fast floating phyllosilicate mineral. A change to a modified guar gum led to an immediate improvement in recoveries whilst maintaining the grade of pyrite concentrate to the roasters. The main collector is sodium mercaptobenzothiazole (SMBT). On one plant this is enhanced by the use of a methylisobutylcarbinol (MIBC)/paraffin mix which recovers kerogen, a light organic mineral containing finely disseminated gold and uranium. The most widely used frother is a polyglycol ether. These reagents are added simultaneously immediately ahead of the pipe columns which feed the rougher banks, which allows for thorough mixing. Copper sulphate solution is added as the pulp enters the rougher banks.

The flotation cells are arranged in a conventional rougher-cleaner circuit. Steady state conditions are maintained by automatic control of pH of the feed (3,8), liquid:solid ratio (1,73), reagent addition and feed rate to the rougher cells.

Laboratory tests have shown repeatedly that pyrite floats relatively quickly, but that other gold-bearing minerals respond more slowly. It has become standard practice, therefore, to create froth conditions that allow for a high mass pull in the first set of cells of the rougher banks in order to remove as much pyrite of final product grade as possible. To achieve this, considerable attention has been given to ensuring that froth removal launders and pipes are of adequate size. It has also been shown that gold recovery varies inversely with sulphur grade in the final product. However, a minimum grade of 30% has been found necessary for the sulphuric acid plant.

12.4.4.4 *Treatment of flotation tailings*

Cyanidation of flotation tailings can yield gold dissolutions up to 40%. However, current gold grades in the flotation tailings are relatively low and recovery of gold from this source is not necessarily economic. Previously-deposited flotation tailings are of higher grade, but reclamation and redeposition, besides being costly, will require large amounts of water, which is a scarce resource on the OFS goldfields.

At President Brand it has been possible to take advantage of the amenability of flotation tailings to cyanidation with only minor capital expenditure as the flotation tailings are presently treated for uranium recovery. Cyanide is added in surge pachucas ahead of the acid uranium leach. Depending on the feedstock, up to 40% of the gold is dissolved, of which about half is subsequently reprecipitated in the uranium leach. Unprecipitated gold follows the solubilised uranium through the circuit and ultimately reports in concentrated form to the solvent regeneration aqueous solution, which is a discard stream of the solvent extraction plant. Gold is recovered by electrowinning in open bath cells.

12.4.4.5 *Treatment of pyrite concentrates*

The pyrite concentrates are delivered in slurry form to the central metallurgical complex at President Brand. Road tankers are used for transport from the two distant flotation plants. After weighing and sampling, the concentrates are leached for uranium by addition of sulphuric acid and injection of steam. Liquid-solid separation is carried out on rotary filters with the residue being repulped to 70% solids for direct feed to the sulphuric acid plant roasters.

Direct cyanidation of pyrite concentrates yields a gold dissolution of between 40 and 60% depending upon the grade and origin of the pyrite. However, after roasting dissolutions of up to 90% are possible. Hence the 1 150 tons per day sulphuric acid plant has an important role in the overall flowsheet.

Roasting parameters have a significant effect upon subsequent cyanidation efficiency. Highest gold dissolution and maximum sulphuric acid production are obtained when there is a very low residual sulphur content ($<0{,}05\%$) in the calcine. However, 'over-roasting' in the presence of an excess of oxygen results in the formation of some sulphur trioxide and consequently in high costs for neutralisation of effluent water, corrosion of gas cleaning equipment, damage to the vanadium pentoxide catalyst and the production of a visible emission from the stack. Optimal control of the pyrite/oxygen ratio is therefore essential.

Pyrite arisings are in excess of sulphuric acid plant capacity. The market for the excess pyrite has been found to be variable, and an investigation into direct gold recovery from pyrite has been carried out. The most attractive option is fine grinding. At the time of writing, a CIP plant incorporating fine grinding using Vibro-Energy mills (V.E.M.) is under construction. In these mills, a pyrite slurry flows through a bed of vibrating ceramic cylinders where coarse particles are selectively ground. This technique has been widely used in other industries.

12.4.4.6 *Treatment of calcine*

Originally, the gold recovery plant included belt filters, clarification and zinc precipitation. Persistently high soluble losses motivated the construction of the first full-scale CIP plant in South Africa for treatment of calcine. After cyanidation the leached calcine slurry is screened and then gravitates through a train of seven flat-bottomed mechanically agitated contactors. Interstage

screening is by means of peripheral woven mesh panels. Owing to the low linear throughput it has not been necessary to consider later screening developments such as 'EPAC' (Equalised Pressure, Air Cleaned).

Selection of carbon for gold adsorption from calcine pulp has proved to be critical due to the competition from base metal ions. Tests on synthetic gold cyanide solutions have given misleading results, so all activity tests are carried out on plant solutions. Carbon testing is also carried out by suspending carbon in baskets in the contactors. Gold loading on carbon, consistent with an acceptable dissolved gold profile down the contactor bank, has been below initial expectations. Carbon activity decreases with time in the contactors, owing to progressive poisoning by lime, silica and base metals. Pulp dilution from recycle streams, gland seal water and apron spillage has a noticeable effect on solution gold concentration. Other adverse factors are the relatively high slurry temperature and free cyanide strength.

Elution is carried out using the process developed by the AARL. Batches of carbon are transferred to a column where they are treated with hot, dilute hydrochloric acid then soaked in a mixture of sodium cyanide and sodium hydroxide at elevated temperature and pressure and finally eluted with softened water. All the carbon is then regenerated in a rotary kiln at 700°C. Electrowinning cells developed by AARL, which use an ion-exchange membrane and pure sodium hydroxide solution as anolyte, are used to treat the eluate. This type of cell permits the use of a high mass ratio of gold to steel wool cathode which assists the subsequent calcining and smelting operations.

12.5 Waste Rock Recovery and Treatment

The origins of waste rock are outlined in Section 12.2.2 above. The major sources are underground development and sorting.

12.5.1 Development waste

The average grade of development waste is likely to be less than 1,0 g Au/ton, although there are times when the value sent to the waste rock dump exceeds this figure. At this value and assuming about 70% gold extraction, the revenue from its treatment allows room for transport and treatment costs, provided a fully amortised plant is available nearby. This contribution in itself has often been justification enough to top up the plant when the supply of run-of-mine ore is insufficient to match the available treatment capacity.

But consideration of average grade alone masks other possibilities. It is important to determine the gold grade of the whole spectrum of size ranges and the mass distribution of material in each, and from this to decide whether one or more of these size fractions is worth setting aside for immediate or future treatment. It is also important to determine the gold content of a representative number of individual rock pieces within each size range above about 25 mm, to be able to determine the feasibility of sorting the larger rock pieces.

Because of the relatively high capital cost of a screening and washing plant to classify run-of-mine waste into various size fractions, it is unlikely

that any development waste stream will warrant this treatment, particularly if coupled to automatic electronic sorting. But if part of the infrastructure already exists, for instance an aggregate preparation plant on site or a redundant crushing, screening and washing plant, then these possibilities become more realistic. An aggregate preparation plant can be used for washing waste. The fines, which are a nuisance to the operator and likely to carry the highest concentration of gold, can be screened out and classified. The slimes fraction can be pumped to the mill thickeners and the sands conveyed to the mill feed bin or submitted to heap leaching.

If a sorting plant is available, washed and sized waste can be conveyed to the plant, sorted, the accept fraction sent forward for gold extraction and the reject returned for aggregate preparation. If a sorting plant is not available, there is still merit in examining the various products from the aggregate plant. Representative samples of each size fraction, especially the popular minus 6 mm crusher sand, should be subjected to simulated heap leaching tests in large diameter columns to determine the period and chemical conditions required to obtain optimum gold dissolution and its recovery on activated carbon. On this basis it will be possible to calculate the economic viability of a heap leach operation on any size fraction as obtained from the aggregate plant, or as reduced by secondary crushing to a smaller size range. Typically it has been found that some 75% of the gold in minus 6 mm crusher sand can be heap leached in two weeks using a caustic solution containing 0,3 kg NaCN per ton of ore. The pregnant solution is collected, passed through columns of activated charcoal for adsorption of the gold while the barren is made up to strength and recycled through a spray distribution system onto the heaps.

The ideal is for this operation to be carried out in close co-operation and association with the aggregate producers drawing their raw material under contract from the owner's waste rock dump. They carry out the crushing, washing and sizing operations and return to the owner the high grade fines for treatment in the plant. Having the necessary transport and handling equipment, they can also build the heaps on the leach pad. After heap leaching and washing is complete the heap leached material can be loaded into trucks for sale as aggregate. Such a plant is under construction at the Kinross mine.

12.5.2 Waste rejected from ore sorting

Because each rock piece is interrogated individually, a well run ore sorting plant should reject waste with an average grade significantly below that set on the sorter, and the average grade of the reject fraction should not exceed a value that equates in cents per ton to the downstream marginal cost of treatment between the sorting plant and the slimes dam.

If the above criteria are met it is unlikely that extraction of gold from the reject fraction from ore sorting could bear the costs of further crushing, screening and heap leaching. Indeed it appears from tests that the percentage dissolution of gold from fresh reject material crushed to minus 6 mm is considerably less than the 75% obtained from this fraction when derived from run-of-mine waste. Under these conditions rejects from sorting can be

sent as raw material to the aggregate preparation plant.

12.5.3 Radiometric sorting of waste rock

At the Hartebeestfontein mine, reef is picked manually from development waste in the size range from 50 mm to 150 mm. About 35% of the sortable rock is accepted as reef and the remaining waste is dumped at a grade of about 0,5g Au/t. The total rock stockpiled on the dumps at present amounts to about 30 million tons containing gold worth about R350 million at current prices. Samples of this rock were tested to evaluate its sortability with a radiometric sorter. Most of the individual rocks assayed at about 0,1 g/t with very few assaying at above 0,5 g/t. A production scale radiometric test facility was subsequently erected to evaluate the feasibility of sorting the rock by radiometric means. Rock samples tested were typically 1 000 ton lots.

Great care was taken to ensure that sub-samples for assay purposes were accurate and extensive facilities were provided to sample the various products. The tests showed that the sorter accept fraction assayed at 1,5 g/t and the reject fraction assayed at only 0,15 g/t. About 25% of the feed to the sorter was accepted as reef. The rock sorted was in the size range 25 to 65 mm and 65 to 115 mm. Good washing and screening facilities were considered to be essential for the success of this type of operation. High screening efficiencies (>90%) were recommended. Jaw crushers were chosen for this programme for primary crushing prior to screening because they tended to produce less fines than cone crushers. It was noted that waste material tended to break as slabs in the jaw crusher.

The economic viability of radiometric sorting of the run-of-mine waste proved to be marginal in this particular case. It was established that gold in run-of-mine waste could be more economically recovered by means of screening and washing of the waste, and processing the fines. However, the replacement of the original reef-picking operation with radiometric sorting appears to be promising, but two-stage sorting will have to be done.

12.5.4 Waste rock reclamation at the Blyvooruitzicht Gold Mine

Development waste generated in the underground mining operations at Blyvooruitzicht Gold Mine has been hoisted at a single shaft over a number of years, and deposited on a dump presently containing about 4,37 million tons. This dump has an average value of 0,7 – 0,8g Au/t while the current waste value is about 0,3g Au/t. The –10 mm fraction, however, contains about 2g Au/t. This fraction comprises about 15% of the current waste, but it can go as high as 40% in the dump. A considerable portion of the gold content can therefore be recovered in a relatively small fraction of the total tonnage in a simple screening and washing plant.

The waste rock reclamation plant at Blyvooruitzicht is designed to treat both current and reclaimed waste at rates of about 25 000 and 40 000 tons per month respectively. A flowsheet of the circuit is shown in Figure 12.10. During the periods when waste is being hoisted, plant feed is drawn from the shaft waste bin; at other times, rock is reclaimed from the waste dump by means of a front end loader via a ground bin. Rock is transferred from

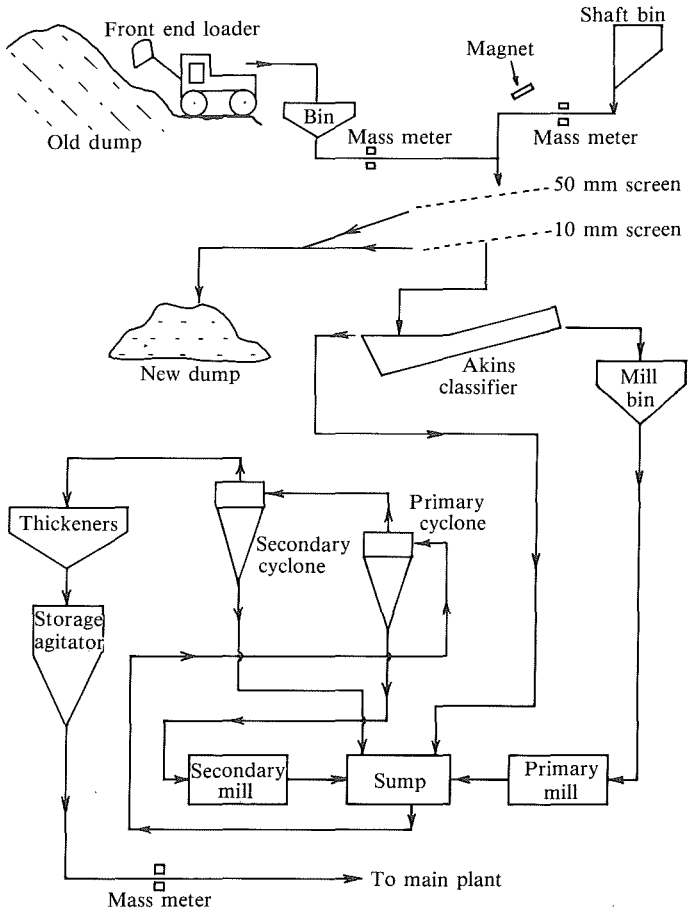

Figure 12.10. Waste rock reclamation.

the ground bin or the shaft bin to the washing screen on separate conveyors.

The washing screen is a 4,3 m long by 2,7 m wide double-deck vibrating screen with a manganese steel top deck of 50 mm opening and a polyurethane bottom deck of 10 mm opening. Washed oversize material (+ 10 mm) is deposited via a series of conveyors and a spreader onto a new 'treated' dump; − 10 mm material is fed to a 1,2 m Akins Simplex classifier. The Akins classifier underflow is fed by conveyors via a mill bin to a two-stage milling circuit. The circuit comprises two 1,6 m diameter by 6,7 m mills. The fines are fed to the first (primary) mill which discharges into a common sump. From the sump the material is pumped to a 610 mm primary hydrocyclone. The overflow of the primary cyclone is fed to a 610 mm secondary cyclone. The overflow of the secondary cyclone, containing about 75% minus 75 μm material, is fed to two 15,2 m diameter thickeners. The underflow of the

primary cyclone is the feed to the secondary mill and the secondary cyclone underflow is returned to the sump. The overflow of the Akins classifier is also fed to the mill sump. The grinding media in the mills are 70 mm diameter balls.

The thickener underflow is pumped to a surge Browns tank from where it is transferred to the main gold plant, some distance away, for treatment with current low grade ore. Gold extraction is about 88%. Waste rock feed rate to the plant is monitored by means of nuclear belt weighers, while a mass-flow meter is used to measure the tonnage transferred to the gold plant.

12.6 Heap Leaching of Dumps

Heap leaching is a process which is quite widely used, particularly in the western United States, for the leaching of low grade gold ore. The process has not yet been applied to South African run-of-mine gold ores, although *in situ* leaching in underground stopes is being tested in a number of mines. Heap leaching has also recently been applied to leach reclaimed sand and waste rock. One operation on the East Rand treats about 25 000 tons per month of accumulated sand on three leaching pads. The pad loading-leaching-unloading cycle is three weeks. Gold is recovered from the leach solution in a cascade of upflow columns on activated carbon. Considerable difficulty has been experienced in controlling the pH in the heap because of the variable acidity in the old dump. Pre-liming of the sand has been found to be essential to prevent the solubilisation and subsequent precipitation of base metals, which result in blinding of the heap, and to contain cyanide consumption.

The two major variables which must be considered in the selection of a heap leaching process are the permeability of the ore and the percolation of the leach liquor through the heap (Thorndycraft, 1984). The former refers to the ability of the leach solution to penetrate ore particles. This penetration takes place through micro-cracks in the ore particles or along grain boundaries. The rate of penetration may be improved, in the case of very competent rock, by fine crushing to expose the gold. It is clear, however, that penetration of the ore by the leach solution is a prerequisite for successful heap leaching.

The second requirement for successful heap leaching is the free percolation of the leach liquor through the heap to ensure adequate wetting of the ore. Poor percolation may result in channelling and the leaching of only a small percentage of the heap, the wetting and leaching of only an outer layer of the heap, or flooding, which can cause severe erosion of the heap. This problem usually relates to the particle size distribution, and particularly to the amount of fines in the heap. Fines migrate downwards with the leach solution and cause blinding. Fines generated in the heap during leaching due to ore degradation can similarly result in heap blinding. Poor percolation can sometimes be overcome by crushing and agglomerating the ore, but this may not be economic.

The procedures used in heap construction, particularly when leaching

run-of-mine ore, are extremely important. These should be designed to minimise size segregation in the heap, which is a cause of channelling, and to minimise compaction which hinders percolation.

12.7 Bacterial Leaching of Dumps and Slimes Dams

12.7.1 Theoretical aspects

It has long been known that valuable metals remaining in dumps of sulphidic waste material become solubilised with time and can be recovered in the rain-water run-off. This was frequently believed to be due to 'weathering' and the result of chemical reaction. Acidic run-off also occurs from South African gold mine waste dumps and generally becomes apparent following alkalinity depletion in the dump. In this case the run-off contains iron salts and is not worth recovering. However, it has been found that gold previously encapsulated in sulphide particles, becomes liberated.

It was not until about 30 years ago that it was found that solubilisation of metals in dumps and mines was due mainly to bacterial action. The bacteria responsible are generally referred to as chemolithotrophic or 'rock eating' micro-organisms, as they obtain their energy from the oxidation of inorganic material such as sulphides, sulphur and ferrous iron. Oxygen and carbon dioxide from the air are used for this purpose. The carbon dioxide provides the 'building blocks' for the organic body composition of the micro-organisms. Trace amounts of salts of magnesium, calcium, phosphorus and potassium are also necessary. These are obtained from minerals and associated mineral water, but supplementary sources are sometimes necessary. Nitrogen is essential, but as these micro-organisms do not fix nitrogen from the air, their only source is whatever ammonium salts are dissolved in local waters.

There are a large number of chemolithotrophic bacteria, but those most commonly known to be involved in the leaching of ores are listed below with the inorganic species they oxidise.

Micro-organism	*Oxidised Inorganics*
Thiobacillus ferrooxidans	S°, S^{2-}, $S_2O_3^{2-}$, Fe^{2+}
Thiobacillus thiooxidans	S°, S^{2-}, $S_2O_3^{2-}$
Leptospirillum ferrooxidans	Fe^{2+}

Like all other micro-organisms, there are a great number of strains of each type which have a symbiotic relationship with others. Natural selection therefore develops a mixed strain of various bacteria that are best adapted to decompose the minerals present in the particular environment.

Autotrophic bacteria decompose most sulphide minerals. The reactions, as illustrated below, result in the formation of various compounds, many of which react further by normal chemical routes. Of particular interest is the formation of jarosite, which occurs in substantial amounts under the conditions in which the autotrophic bacteria proliferate. It will be noted that the formation of jarosite releases acid, which helps maintain the environ-

ment at the pH most suited to the micro-organisms. It is of interest to note that the colour change from grey to yellow on the surface of slimes dams is the result of the formation of basic iron salts such as jarosite.

$$2FeS_2 + 7O_2 + 2H_2O \xrightarrow{\text{Bacteria}} 2FeSO_4 + 2H_2SO_4$$

$$4FeAsS + 13O_2 + 6H_2O \xrightarrow{\text{Bacteria}} 4H_3AsO_4 + 4FeSO_4$$

$$CuFeS_2 + 4O_2 \xrightarrow{\text{Bacteria}} CuSO_4 + FeSO_4$$

$$4FeSO_4 + O_2 + 2H_2SO_4 \xrightarrow{\text{Bacteria}} 2Fe_2(SO_4)_3 + 2H_2O$$

$$FeS_2 + Fe_2(SO_4)_3 \xrightarrow{\text{Chemical}} 3FeSO_4 + 2S^\circ$$

$$2FeAsS + 7Fe_2(SO_4)_3 + 8H_2O \xrightarrow{\text{Chemical}} 2H_3AsO_4 + 16FeSO_4 + 5H_2SO_4 + 2S^\circ$$

$$Fe_2(SO_4)_3 + 6H_2O \xrightarrow{\text{Chemical}} 2Fe(OH)_3 + 3H_2SO_4$$

$$Fe(OH)_3 + H_2SO_4 \xrightarrow{\text{Chemical}} Fe(OH)(SO_4) + 2H_2O$$

$$3Fe_2(SO_4)_3 + M_2SO_4 + 12H_2O + 6H_2SO_4 \xrightarrow{\text{Chemical}} 2MFe_3(SO_4)_2(OH)_6$$

where M = Na, K, NH_4, H.

Ideal conditions for bacterial leaching are as follows:

- the ore particles should be as small as possible;
- there should be an adequate nutrient supply;
- bacteria usually occur in heaps by natural inoculation. However, an inoculum may have to be supplied in relatively new heaps;
- air and water must be able to permeate easily through the mass;
- the heap must be situated on a suitably impervious base.

12.7.2 Dump leaching by bacteria

Dumps usually contain fairly coarse particles and so could be amenable to the technique of bacterial leaching. Application of the nutrient solution would generally be done by spraying for a specific period followed by a rest period while the solution drains down through the dump. In the case of base metal leaching, the solution draining from the dump is treated by means of a suitable recovery process and the barren liquor recycled back to the dump with the addition of nutrients and pH adjustment. The recycled solution should not contain chemicals, for example solvents, which may prove harmful to the bacteria. Sulphide decomposition and thus metal recovery depends on the extent to which the leach solution can diffuse into the particles. Sulphide decomposition in a dump is generally only about 40 – 60%.

In the case of dumps that contain gold encapsulated in sulphide minerals, bacterial leaching will liberate the gold; however, as bacterial leaching results in the dump becoming acid, it would then have to be rendered alkaline prior

to cyanidation. Bacterial leaching of dumps is still in the developmental phase in South Africa.

12.7.3 Slimes dam leaching by bacteria

The material in a slimes dam is generally very fine and therefore highly compacted, with the result that the interior of the dam is almost impenetrable to water and air. Thus the slime is largely preserved as when originally laid down. As air and water penetrate the surface and sides of the dam, with natural bacterial inoculation, oxidation of the surface sulphide mineral takes place fairly rapidly. However, within the dam oxidation is found to take place to a depth of only half to one metre, depending on the age of the dam. Gold is liberated in the oxidised zone and recovery may be achieved by removing the oxidised material and cyaniding. The oxidised slime, however, is only a small portion of the dam. Recovery of gold from the remainder of the dam could be achieved by ploughing and inoculating successive layers of slime. Provided the moisture content of the ploughed mass is sufficient to ensure all particles are wetted, decomposition of slime containing 4% sulphide minerals will be completed in about 35 days.

The above procedure can be carried out on the dam or, for closer moisture control, the material could be transported to a suitable concrete pad for bacterial oxidation. Another method, which is receiving increasing attention, and which may have application for treating ores such as the arsenopyritic gold deposits found in the Eastern Transvaal, is the biological oxidation of ore pulps or concentrate in agitated vessels prior to cyanidation.

12.8 References

Anon. (1982).There's still good profit the second time around. *Coal, Gold Base Miner.* **30**, 59 – 63.

Boydell, D.W., Laxen, P.A., Bosch, D.W. and Craig, W.M. (1977). The new uranium recovery circuit at Blyvooruitzicht. *CIM Bulletin,* **72**(805), 127 – 134.

Dennis, E.F. (1974). An exercise on the calculation of the volume of a small irregular-shaped chrome dump. *J. Inst. Mine Surv., S.A.,* **17**, 179 – 222.

Laxen, P.A. and Brown, T.D. (1984). The carbon-in-pulp plant at Rand Mines Milling and Mining: problems encountered and developments introduced. In *Proceedings of the International Conference on Recent Advances in Mineral Science and Technology* (*MINTEK 50*), edit. L.F. Haughton. Council for Mineral Technology, Randburg.

MacDonald, E.H. (1983). *Alluvial Mining — The Geology, Technology and Economics of Placers.* Chapman and Hall, London and New York, 203 – 209.

Sabbagha, C.M. (1982). Practical experiences in pumping slurries at ERGO. In *Proceedings of the 8th International Conference on the Hydraulic Transport of Solids in Pipes.* BHRA Fluid Engineering and the South African Institute of Civil Engineers, Johannesburg.

Thorndycraft, R.B. (1984). Heap leaching methods in the western United States and applicability to Canada. In *Proceedings of the 16th Annual Meeting of the Canadian Mineral Processors.* Ottawa.