Blast furnace tapping practice at ArcelorMittal South Africa, Vanderbijlpark Works

P.G. Geyer and Z. Halifa
ArcelorMittal South Africa

Tapping a blast furnace is necessary not only to deliver the product, but is also essential for the safety of the furnace and workers in the cast-house. This paper will highlight the practices at ArcelorMittal's blast furnaces in the Vanderbijlpark Works, with specific focus on tap-hole design and monitoring as well as casting practice. Extension of the tap-hole life and hearth campaign will be illustrated with reference to the methods of maintenance of the tap-holes, troughs, runners, and cast-house equipment. The importance of proper cooling, good thermocouple installation, and temperature monitoring will be explained.

Introduction

The blast furnace is a countercurrent solid-gas reactor. Air (sometimes oxygen-enriched) and pulverized coal are injected at the bottom of the furnace through tuyeres to drive the reduction of iron ore and sinter, which is charged with coke at the top of the furnace. Molten hot metal is collected in the hearth of the furnace and periodically tapped via the tap-hole.

In the early 1900s the blast furnace was tapped into a runner system, which viewed from above looked like a sow with piglets suckling; hence the name of pig iron that is used to refer to blast furnace hot metal even today. Technology has advanced and since the early 1990s ArcelorMittal has utilized a full-pool practice at the Vanderbijlpark works blast furnaces. Full-pool practice refers to the technology of keeping the trough filled with liquid hot metal and slag during short periods when the furnace is not being tapped. During the following tap, the trough is still liquid, making it easier to separate iron and slag, as well as preserving heat in the trough, resulting in cleaner, hotter iron delivered to the steel plant via rail transport in refractory-lined torpedo cars.

Tap-hole and hearth refractory designs

At ArcelorMittal South Africa there are three blast furnaces, two of which are in Vanderbijlpark. Even on the same plant there are significant differences in the refractory design. Differences include the types of material used as well as the configuration. Some of the differences are based purely on historical and expected performance, but some are inspired by time or financial constraints.

The tap-hole and hearth are normally the determining factors of the campaign life of a blast furnace. As such, they are designed with a lifetime in excess of 15 years in mind, with most modern blast furnaces nowadays designing for 20-year and longer campaigns.

Hearth refractory designs

In principle there are two basic hearth designs, both of which are implemented at Vanderbijlpark. At Blast Furnace C (BF C) we have the small block or brick design, whereas at Blast Furnace D (BF D) we have the large block design. The design difference is due to the size of the refractories. The main advantage of a small block hearth is ease of construction, as the bricks can be manhandled into position and mortared on all sides. Another advantage is that the bricks are less prone to cracking as the hearth as a whole is basically already cracked. This, however, is also a disadvantage as each joint can serve as a heat transfer barrier, especially if there is movement and the joints become gaps.

The big blocks do not suffer the same disadvantage as there are much fewer joints. However due to thermal expansion, the large blocks tend to crack, thus causing similar heat transfer barriers.

The basic designs implemented in BF C and BF D are shown in Figures 1 and 2 respectively.

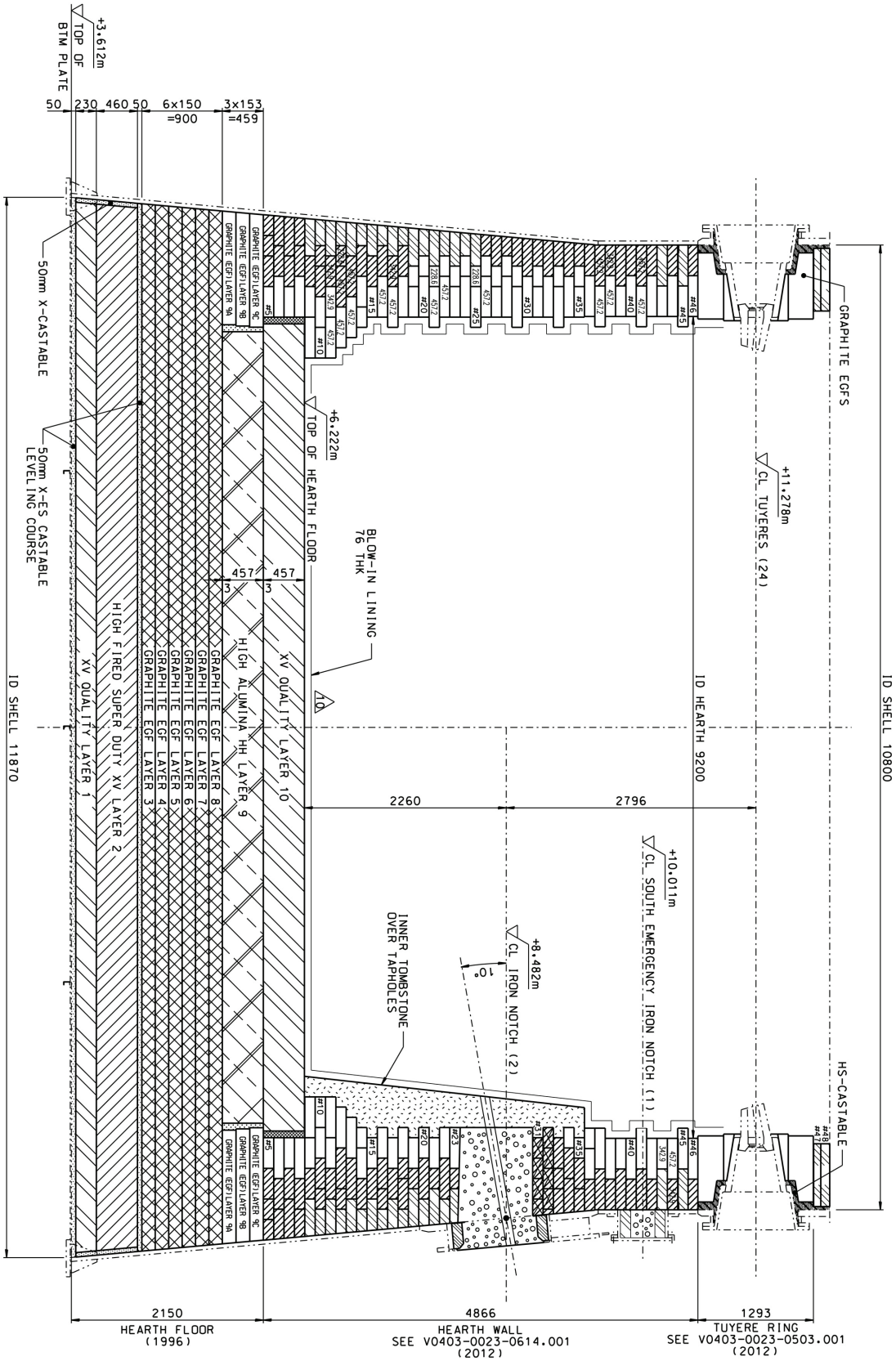

Figure 1. Refractory layout at BF C illustrating a small block hearth design

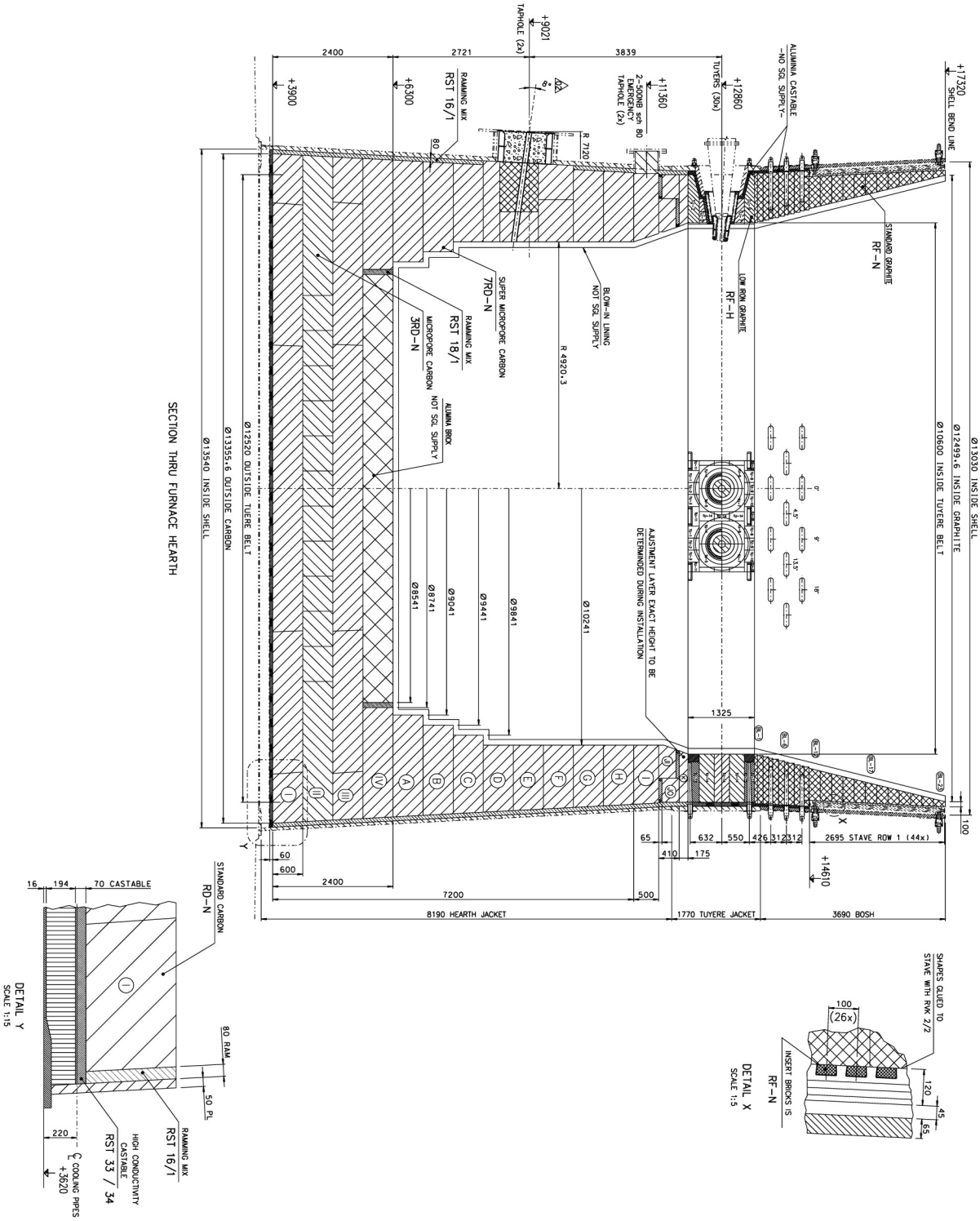

Figure 2. Refractory layout at BF D illustrating a big block hearth design

Within the two basic designs there are several variations, and some similarities between the big and small block designs. These similarities and differences are the type of refractory material being used against the wall, the hot-face, and around the tap-holes. One of the biggest considerations is the transfer of heat from the interior of the furnace to the cooling medium. For this, various types of refractories can be used. In general, the cost increases with the thermal conductivity. Although it would be very costly, the best hearth is in theory built with the highest conductivity

refractories. Such a hearth would last forever and never wear (due to a freeze lining protecting the refractories), but it would also take so much heat from the furnace that the cost of operations would be high. Such a hearth would cool so rapidly during a furnace shutdown that it would be difficult to start up again, leading to even higher costs.

In designing the hearth, a balance must be found between the factors mentioned above.

BF C was constructed in 1996 and, at the time, it was a lot simpler and less costly to install a small block design hearth. Through the years it was necessary to do emergency repairs on the hearth, and even during the latest hearth wall replacement in November 2012, a very similar design was used. One of the major factors determining the design used during that repair was the availability and lead time required to get the replacement hearth on site.

Tap-hole design

In addition to the design criteria to be taken into account for the hearth, the tap-hole must also resist the high-velocity flow of liquids and gases during tapping. It must also be able to resist the pressure of liquid and be as impermeable as possible during the interval between taps, since there is no mechanical support (steel shell) as with the rest of the hearth. Cooling is more challenging due to the shape, although just as critical.

The tap-hole is in the hearth wall opening termed a 'chapel'. On the outside it consists of a steel branch attached to the hearth shell. The refractories are keyed so as to not be blown out of the furnace by the hydrostatic and blast pressure in the hearth. ArcelorMittal's chapels are lined with graphite bricks against the shell to ensure good thermal contact as well as to serve as a freeze lining in the case of damage to the cast block. The block is normally cast *in situ*, although pre-cast and cured blocks have also been installed. This is normally done only during long outages as the pre-cast blocks are more difficult and time-consuming to install.

Tap-hole repairs

During an unscheduled stop at BF D, with a duration in excess of a month (blow-down and salamander tapped), it was decided to do a panel patch of the hearth shell around the tap-hole. The damage was due to a previous break-out of the trough, with iron running down the side of the hearth. It was also planned to re-do an unsuccessful repair on the water leak in the chapel of the tap-hole.

After the shell was removed, it was realized there was also damage to the refractories that would have to be repaired.

Some old stock small brick refractories (graphite and NMA) were available and it was decided to employ the small blocks for the repair, but utilizing the big block design (Figure 3). The biggest obstacle was to 'marry' the small and big blocks, and most of the joints had to be cut by hand and the blocks painstakingly fitted.

It is thus possible to carry out repairs from outside the furnace if required, design a mix of small and big block refractories, and keep a furnace in operation safely.

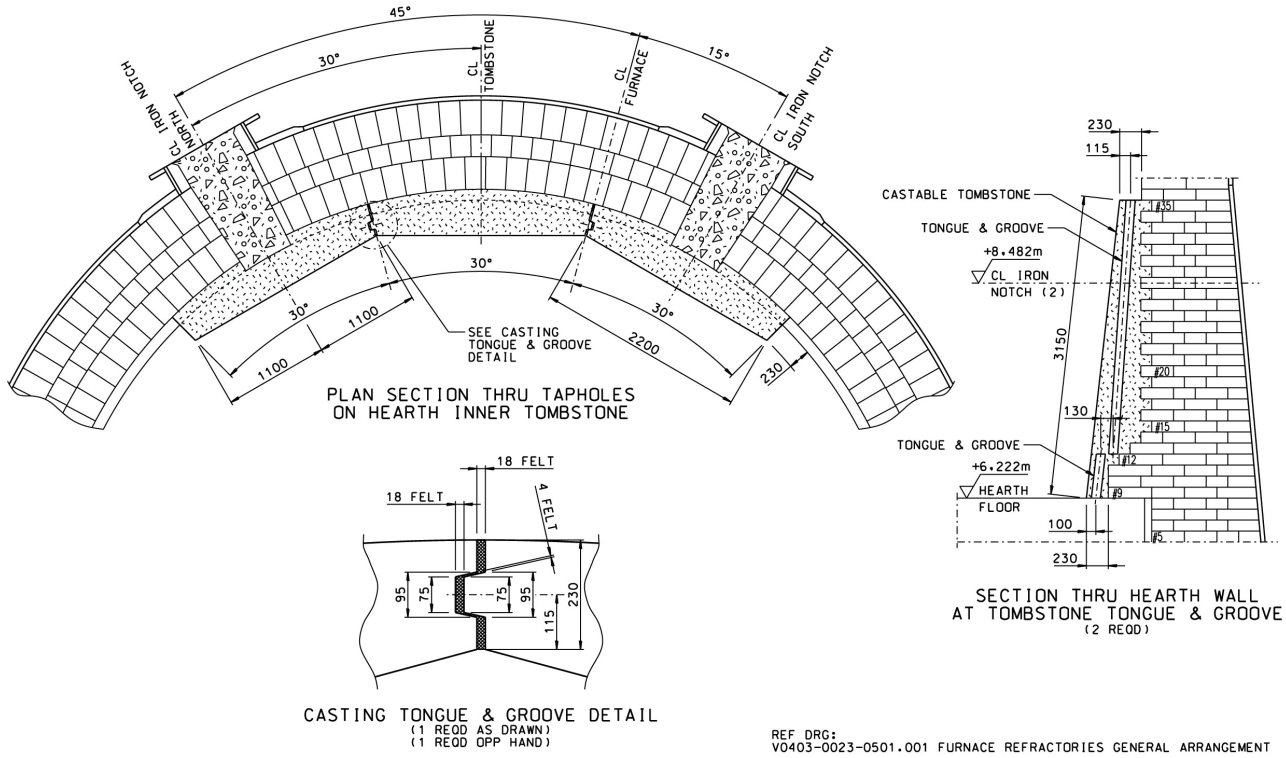

Figure 3. Details of tap-hole refractory

Cooling of refractories

Taking into account the above, the effect of the conductivity will be negated without proper cooling. Several technologies exist by which the hearth can be kept cool, all of which depend on water. At the Vanderbijlpark works, ArcelorMittal employs two of these, with external spray cooling on BF C and channel cooling on BF D. Another technology employs copper staves on the inside of the shell to ensure good cooling.

At BF C, cooling is achieved by designing the hearth shell with a slope and spraying the shell with fixed sprays at the top of the hearth. Gravity does the rest and water runs down the side of the hearth to the bottom, where it is collected in a trough and routed to the pump house. After passing through cooling towers it is pumped back to the furnace and thus recycled.

At BF D the cooling system is closed and pressurized with nitrogen. The water channels are simply welded to the furnace shell, causing water to flow rapidly against the shell, resulting in good cooling. The water is recirculated through a set of heat exchangers that are cooled by a secondary water circuit.

The importance of liquid level control for stable furnace operation

Hot metal is produced continuously, but the furnace is tapped only periodically. Controlling the liquid level in the hearth is thus important to prevent the catastrophic build-up of liquids in the hearth. The liquid level is estimated using a simple model (Figure 4) to calculate the production rate of the furnace and compare that with an estimated tapping rate. Given the volume of the hearth, including the voids between the solid coke particles, an estimate is made of the level inside the hearth. This results in a target tapping interval, usually around 20 minutes at a normal production rate, for both furnaces. The model takes into account the drill-bit diameter, tap-hole length, and hydrostatic pressure of liquids when calculating the tapping rate. This, however, cannot be accurate if the operator does not ensure the tap-hole is drilled through and properly open.

The said tapping interval allows for some accumulation of liquids in the hearth, resulting in a good length of tap when the tap-hole is opened. If the tap-hole is opened too quickly, the tap will be too short and result in increased cleaning work on the tap-floor as well as heat losses in the trough. This can then result in an unwanted increase in tap-to-tap time.

Similarly, if the tap is not started on time, the liquid level in the hearth can become dangerously high, resulting in first slag and later pig iron to be blown upwards into the furnace where it can solidify due to the lower temperature. If

the pig iron reaches tuyère level, there is the increased risk of water leaks which can have even more catastrophic results.

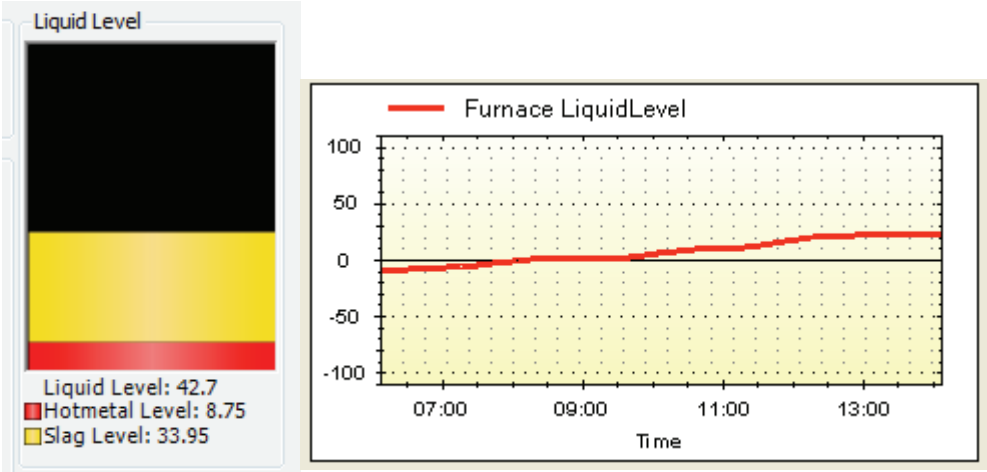

Figure 4. Simple liquid level model result, showing the hearth as a black block with iron as red at the bottom and slag as yellow above the iron. Below the block, the corresponding volume percentage of liquid is indicated. The levels history is also shown (right) and can be used for fault-finding furnace upsets

Once the liquid is above tuyère level, the raceway becomes deformed, changing the gas-flow distribution in the furnace and influencing effectiveness. Also, liquids solidify around the solid coke and severely reduce the heat available to the furnace. If the situation is not compensated for by the injection of extra coke and/or pulverized coal, the liquids will continue to cool, resulting in an extremely difficult situation to remedy. When trying to stop a furnace in this situation, liquids can be pushed up into the bustle main, causing further damage and prolonging the recovery of such a furnace.

The control of liquids in the blast furnace and the importance of tapping a good tap stream with the tap-hole opened properly and on time can thus not be overstressed.

Cast-house operations

During hot metal production at normal levels (close to design), the alternating casting practice is adopted whereby tapping is alternated between the two tap-holes of the furnace to ensure uniform draining of the hearth. During low production levels, single-side casting practice is adopted whereby tapping takes place at only one tap-hole for a period of a week before reverting to the alternating practice. Single-side casting has benefits with regard to optimal usage of the trough refractories and temperature retention.

Several factors can influence the smooth operation of the cast-house, some of which are:

- Torpedos not being placed on time for tapping
- Not tapping the furnace dry during the previous tap
- Delays due to cleaning work, preventing the start of tap-hole drilling
- Cast-house equipment (drill, clay gun, tilter, troughs etc.) failures.

Any of these factors can cause a delay in tapping the furnace and necessitate the reduction of the production rate to control the liquid level in the furnace.

Full-pool practice

When the time arrives for the furnace to be tapped, the tap-hole is drilled open using a 3 m length drill rod in a hydraulic drill. Various sizes of drill bit can be attached to the drill rod, depending on the required tapping rate. A formal procedure sets out guidelines as to the size of drill-bit to use. The drill has both rotational and hammer capabilities. Figure 5 shows a typical schematic of a tap-hole drill machine. The drill is swung in over the trough and latched against the furnace before the drill rod is pushed forward. Normally, rotation only is required to open the tap-hole, but if the clay is very hard, normally just before the full length is reached, it might be necessary to utilize the hammer action. This, however, is avoided where possible as it damages the tap-hole and the mushroom of tap-hole clay can be pushed into the hearth.

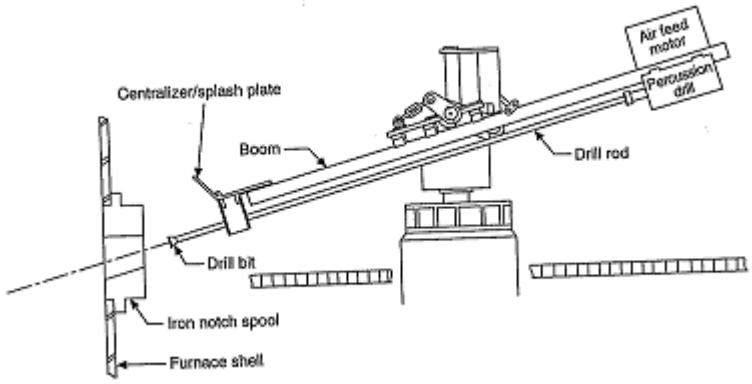

Figure 5. Schematic of a typical tap-hole drill

During the tapping process, hot metal and slag are tapped into a trench-like structure built from refractories and known as a trough. The hot metal and slag separate in the trough while flowing to the skimmer, due to the difference in density of the iron (approximately 7.9 g/cm^3) and slag (approximately 2 g/cm^3). The skimmer block is a refractory block with a passageway at the floor of the trough to allow for the iron to flow past and the slag to be held back during the separation process. Slag and iron overflow the side of the trough at their designed points and are channelled via a runner system to either the granulator for slag or the torpedoes for iron.

With the high production targets at the blast furnaces in Vanderbijlpark Works, a full pool practice is easily sustained. The full pool trough design allows for the trough to be kept filled with molten metal after each tap and drained only when necessary for trough and runner refractory inspections. The molten slag that remains after the tap forms a thin skull layer on the top which assists in reducing heat loss in the trough. The temperature retained in the trough assists in maintaining the high refractory temperatures necessary to avoid oxidation and catastrophic refractory failure. This practice also reduces the risk of skull build-up at the skimmer block, which is essential for the separation process.

The end of the tap is normally indicated by the tap stream becoming very splashy due to gas from tuyere level exiting the tap-hole with the liquid iron and slag. The clay gun, loaded with tap-hole clay, is then swung into the tap-hole and the clay pushed until the tap-hole is sealed. Figure 6 shows a typical schematic of a clay gun, and Figure 7 illustrates tap-hole plugging.

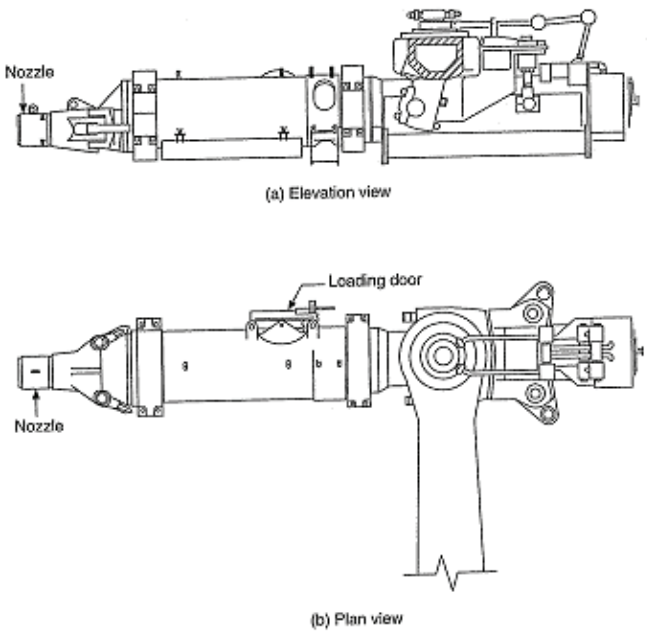

Figure 6. Schematic of a typical clay gun

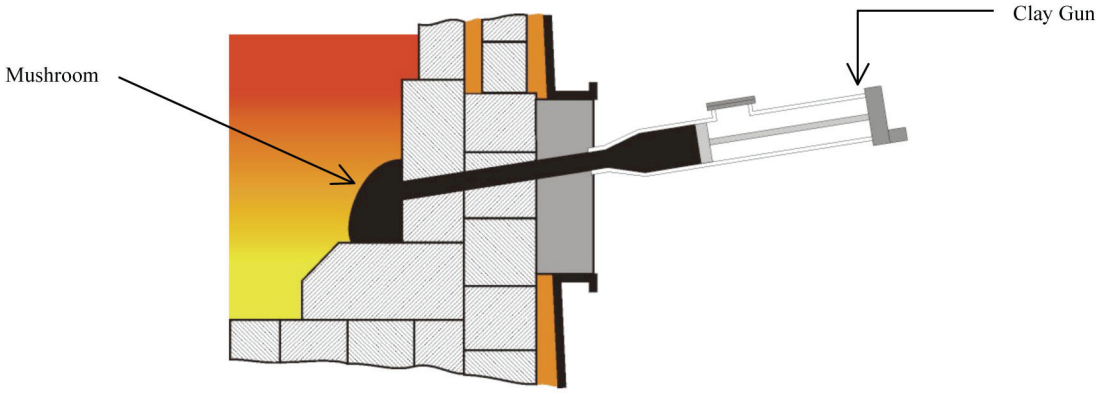

Figure 7. Illustration of normal tap-hole plugging (courtesy of TRB Refractories France)

Sometimes when pushing clay, the clay gun does not form a proper seal with the tap-hole face, resulting in clay spilling into the trough instead of being pushed into the tap-hole. This is not only costly, but also dangerous, as the clay gun has to be loaded for a second attempt at closing the tap-hole, while sparks and hot gas are being blown from the tap-hole. This situation should be avoided by inspecting the face after a tap and maintaining the tap-hole face by grinding it flush and ensuring that it is cleaned properly before opening the tap-hole.

Drill sizes

The choice of the drill bit size used to open the tap-hole is highly dependent on the iron production rate in the furnace. Blast Furnace C has a smaller hearth than Blast Furnace D, which has the higher production rate of the two furnaces.

If the furnace is operating at a high tempo (high production rate), it is required that the hearth be drained of its liquid iron and slag contents as quick as possible to avoid any instabilities and, in severe cases, a chilled hearth. The bigger the drill bit size used to open the tap-hole, the faster the hearth will be drained.

During normal operation (stable furnace in a good thermal state), Blast Furnace C cast-house operators make use of either a 38 mm, 42 mm, 46 mm, or 50 mm drill bit size. The choice of drill bit size depends chiefly on the rate at which the hearth is required to be drained to ensure furnace stability. Blast furnace D cast-house operators make use of a 42 mm, 46 mm, or 50mm drill bit size to open the tap-hole.

Appendix 1 with guidelines on the choice of drill bit size used per tap at the different furnaces are reproduced in the Appendix.

Tap-hole lengths

It is vital that all tapping parameters be kept as constant as possible, including the tap-hole lengths. The variations in tap-hole lengths can be attributed to clay gun capabilities, the amount of clay pushed into the tap-hole during previous plugging, and the quality of the tap-hole clay. Too short a tap-hole may result in a safety risk of a self-opening tap-hole, and too long a tap-hole may result in the drill machine not opening the tap-hole, requiring the use of oxygen lance pipes to open the tap-hole for casting. The tap-hole length required for stable operation is dependent on the furnace size and the mushroom size that is sufficient for adequate tap-hole protection. It is important to obtain a tap-hole length that is superior to the initial thickness of the hearth carbon bricks

Tap-hole wear phenomena

The drillability of the tap-hole clay is defined as the ease with which the tap-hole can be opened after plugging. Tap-hole clays with a smaller grain size (<3 mm) have a higher drillability compared to tap-hole clays with a grain size >3 mm. Successful drilling and closing depends not only on the equipment and the quality of the tap-hole clay, but also on the operator's judgement and experience.

Before a tap-hole can be drilled open, the tap-hole clay must be allowed sufficient time for curing and so avoiding splashes at the start of a tap and/or premature wear on the tap-hole. During the curing process, the volatiles are burned out of the mixture and the clay begins to harden to allow for a firm, proper seal of the tap-hole.

As the furnace is being tapped, internal erosion of the tap-hole increases during the cast by both chemical and mechanical attack of the iron, slag, and gas. The wear in and around the tap-hole area occurs in the following stages (Figure 8):

- Wear on the mushroom

- Wear on the tap-hole diameter
- Wear that increases the tap-hole opening width.

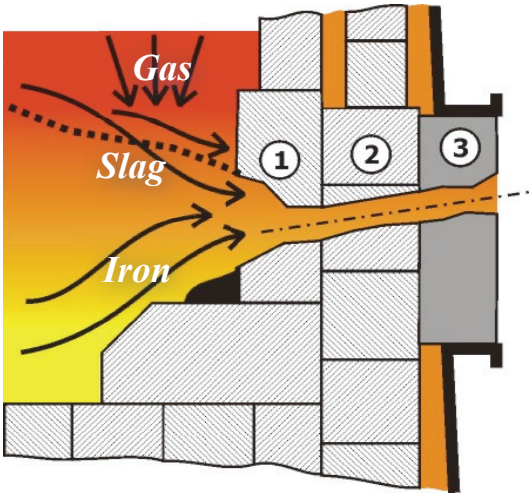

Figure 8. Illustration of the tap-hole wear sequence (courtesy of TRB Refractories France)

Tap-hole clays

Tap-hole clay is a ready-to-use refractory product, made of a bond of aggregates, additives, and plasticizer and used to close the tap-hole after casting. The main functions of tap-hole clay are:

- To plug the tap-hole (to stop the cast in the best condition)
- To control the liquid flow out of the furnace
- To protect the hearth carbon blocks (to ensure protection of the brickwork inside the hearth around the tap-hole area by the mushroom).

The grain size of the dry raw refractory materials used during the manufacturing process is very important in that it has a direct effect on the ease of opening a tap-hole and the ability of the clay to fill any cracks in the refractory bricks around the tap-hole. Clays with a smaller grain size have a greater ability to fill any cracks that may have formed in the mushroom or refractory bricks surrounding the tap-hole.

Table I lists the tap-hole clays used at Vanderbijlpark.

Table I. Tap-hole clays used at ArcelorMittal Vanderbijlpark Works

	ECOTAP 232M	**ECOTAP 531MS**	**ECOTAP 260MS**	**CALDE TAP 343 CES**
Supplier	TRB France	TRB France	TRB France	Calderys South Africa
Type of bonding	Organic - ceramic	Organic - ceramic	Organic - ceramic	Organic
Maximum grain size	1 mm	1 mm	3 mm	3 mm
Plasticity	200-250 kg/cm^3	100-130 kg/cm^3	200-250 kg/cm^3	Plasticity can be adjusted to the type of clay gun

Amount of clay pushed

Tap-hole plugging performance depends on the following factors:

- The tap-hole clay quality
- The clay gun and drill machine capabilities
- The use of the tap-hole clay
- The gas sealing around the tap-hole
- The blast furnace driving.

To fulfil the plugging, the clay must be plastic. The clay temperatures during the injection and the maturity have an influence on the clay plasticity. When plugging the tap-hole, compatibility is necessary between the old and the fresh clay. This compatibility is improved by the carbon network and the expansion of the fresh clay during curing. During the plugging process, it is essential to ensure the formation of a mushroom at the back of the tap-hole. At each plug, enough clay must be pushed to maintain this mushroom, which wears due to abrasion by the liquids exiting the furnace during casting. Figure 7 illustrates a normal taphole plugging operation.

- A high tap-hole clay feed will not provide any benefits, but rather:
- There is a safety risk of tap-hole splashing at the start of a tap
- The clay consumption is higher
- The curing time of the clay is longer
- There is a risk of the oxygen lance being required to open the tap-hole
- There is a risk of shorter cast durations due to longer curing times required or the use of the oxygen lances.

Poor plugging practice

Poor clay gun nozzle cleaning practice

It is essential to ensure that the clay gun nozzle is properly cleaned prior to every tap-hole plugging to reduce the risk of the following:

- Poor filling of tap-hole
- Gaps inside the tap-hole becoming filled with iron and slag that will freeze and generate opening difficulties
- Self-opening tap-holes, which pose a safety hazard if the trough is not prepared and the torpedo is not placed in position for tapping.

Loss of clay between nozzle and tap-hole face

Prior to every cast, the operator needs to ensure that the tap-hole face is not dirty or worn as this may result in a loss of clay between the clay gun nozzle and the tap-hole face.

This condition may result in:

- A risk of a self-opening tap-hole
- Risk of decreased tap-hole length
- Poor filling of the tap-hole
- Additional cleaning required of the tap-hole, which could delay tapping
- Poor compaction of the tap-hole clay.

The operator would need to clean the tap-hole face regularly and/or control the position of the clay gun if leakages persist.

Loss of clay on backside of the ram

A worn clay gun piston may result in a loss of clay on the backside of the ram and leakage around the clay gun piston. This may result in:

- Poor compaction of the clay
- High clay consumption
- Risk of decreased tap-hole length
- Self-tapping.

The only way to overcome this condition is to change the piston part at the end of its campaign

Tap-hole monitoring

Tap-hole monitoring consists of two distinct actions: active monitoring during the tap and off-site monitoring of temperatures in the hearth and around the tap-holes.

Active monitoring

The tap-hole is monitored actively during tapping by the senior operator in the cast-house (at Vanderbijlpark called the keeper). The keeper is responsible for the opening and closing of the tap-hole with the drill and clay gun. He also monitors the tap-hole and rest of the cast-house for the duration of the tap for any abnormalities and takes appropriate actions.

Because each tap-hole is elevated and drilled at an angle to the shell of the furnace, it is the responsibility of the keeper to maintain a close watch on certain tap-hole parameters to ensure a smooth casting process. The keeper needs to monitor the following factors:

- Angle at which the hot metal and slag is flowing from the tap-hole
- Splashy casts (splashing is manifested as a spitting action rather than a smooth stream flowing from the furnace)
- The moment the furnace starts blowing during a cast (blowing is characterized by the emission of sparks instead of a stream of iron or slag
- The condition of the tap-hole i.e. is it fully opened, drill angle.

The angle of the stream of hot metal and slag flowing out the furnace depends on the liquid pressure and gas pressure inside the furnace. High tapping angles pose a safety risk and hot blast volumes into the furnace will have to be reduced to control the tapping angle and flow. Possible splashing of the tap-hole at any time during the cast poses not only a safety risk but also an operational risk. Splashy tapping practices will result in an increase in the amount of cleaning work required after the cast, prior to the next cast. Should this cleaning work be excessive in that the tap end to tap start time increases beyond the norm, this tapping delay could result in a major operational setback such as a chilled hearth (worst-case scenario).

Blowing of the tap-hole as indicated by sparks being emitted is an indication of the furnace being dry and ready for plugging. The keeper needs to ensure that he makes the request for tap-hole plugging when the furnace is actually blowing, rather than when the furnace makes a false blow.

Temperature monitoring

Temperature monitoring is done on two levels. In the control room, the temperature can be monitored on a 24-hour basis by the operator using a digital control system (DCS). Schematics are used to represent the temperatures in an easily understandable way. Figure 9 shows an example of a schematic used in the control room. On the schematic, each point indicates a measuring point on the hearth or tap-hole. At each measuring point, there are 1, 3, or 5 thermocouples installed (Figure 10). The circles at each point in Figure 10 indicate the temperature of each thermocouple, with green indicating a temperature below the alarm limit, yellow a temperature within 10% of alarm, and red the alarm temperature being exceeded, indicating whether there is a protective freeze layer, or whether the hearth is being worn away. The alarm limits are calculated using simple one-dimensional heat transfer calculations, calculating the theoretical heat flux through the wall and then reversing the calculation to obtain the corresponding temperatures at the thermocouple positions.

As can be seen in Figure 9, several thermocouples around the tap-holes are highlighted in red, indicating that the refractory has been worn and the temperatures at the measuring points are higher than ideal. This screen-dump was taken during a period of tapping through the south tap-hole at BF C as the north trough was being repaired.

Off-site, the temperatures can be monitored over longer period. The maximum over periods of weeks or months can then be used and the worst wear can be calculated. With this information, predictions can be made as to possible problem areas. The hearth life can also be predicted in order to ensure safe furnace operation.

If the temperature is not monitored, the risk exists that the hearth or tap-hole wear will continue until it reaches the shell and will not be contained. This can result in a burn-through (break-out) with molten iron running down the side of the shell, damaging the shell, causing explosions when coming into contact with water, damaging thermocouples, and even more extensive damage such as hydraulic rooms overheating and catching fire when situated directly above such a burn-through. Such a situation is extremely hazardous and injuries and fatalities have occurred in some plants.

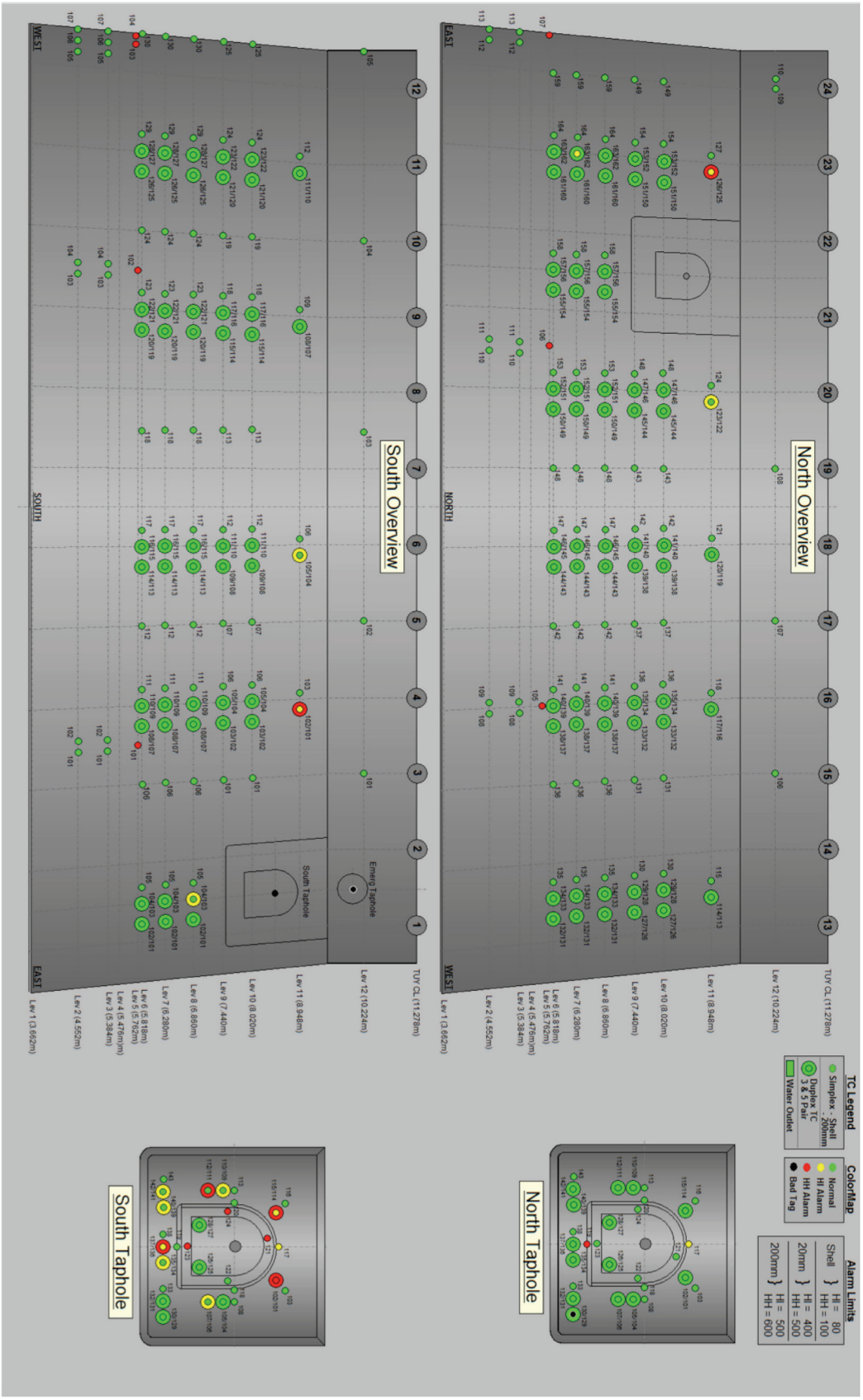

Figure 9. Schematic displayed in control room for temperature monitoring

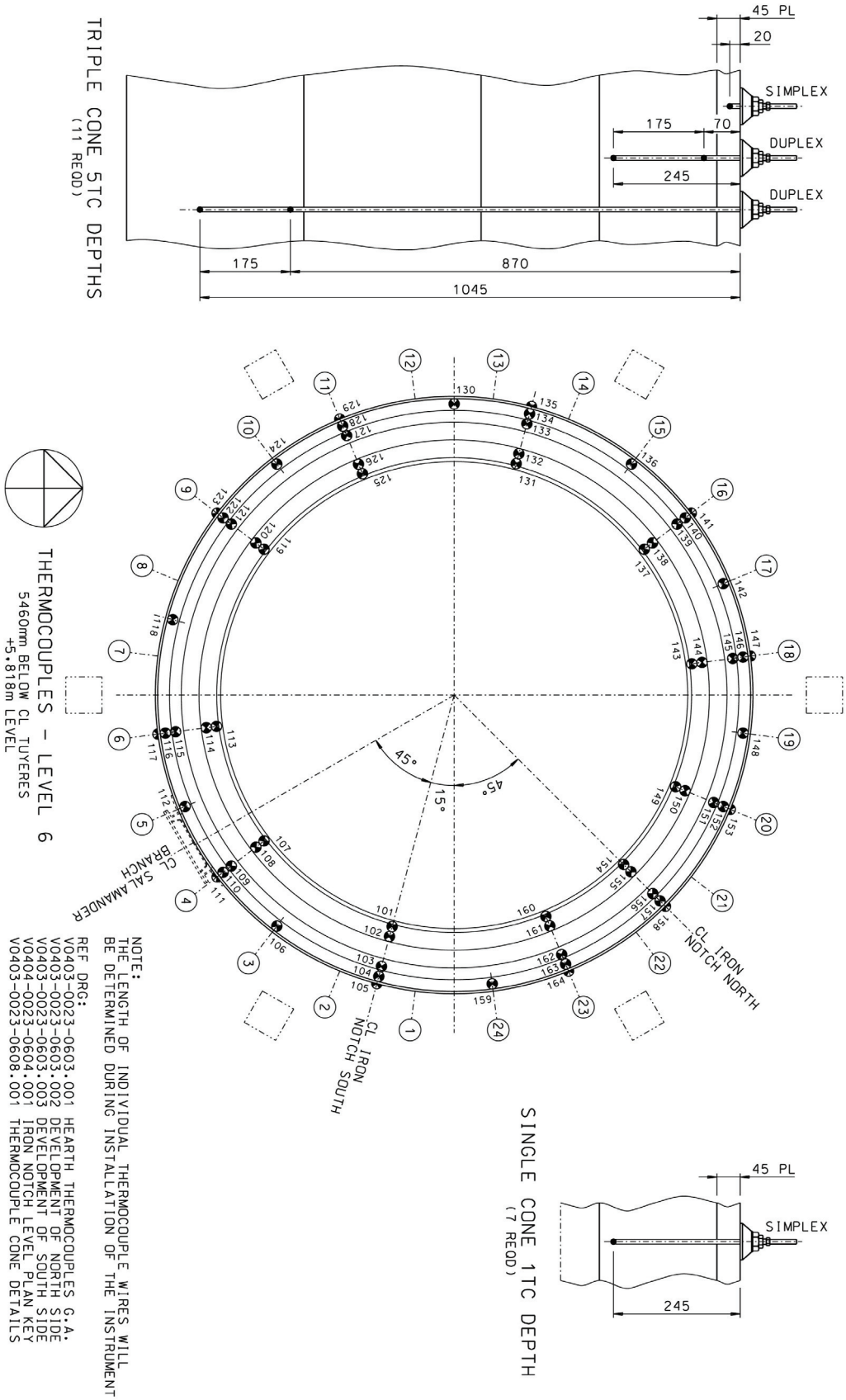

Figure 10. Example of thermocouple layout in the hearth

Appendix 1
Decision Tree 1 - tapping guidelines for Blast Furnace C
Standard diameter = 42 mm

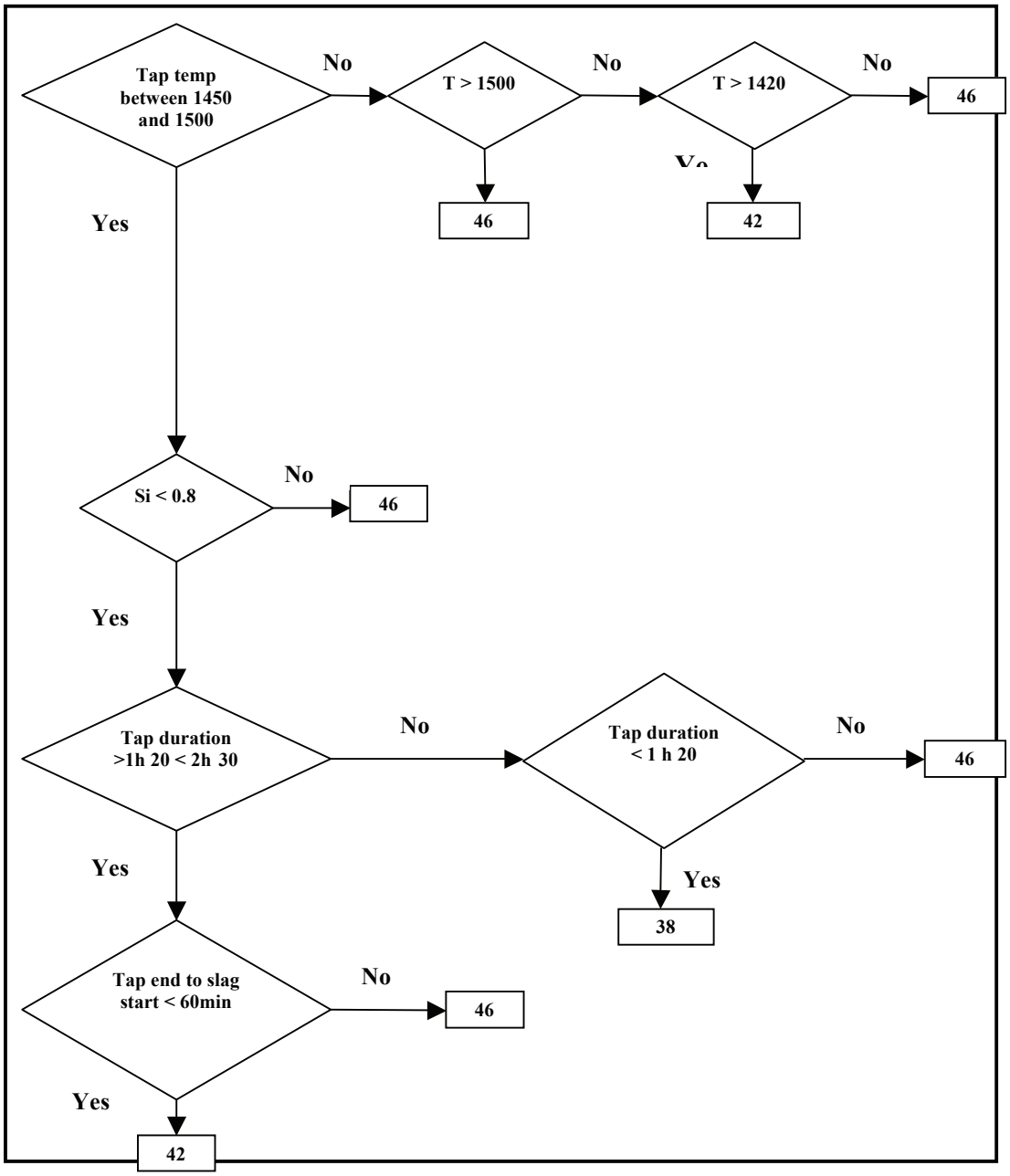

Other guidelines:

1. **If there is no slag after 60 minutes from opening the tap-hole:**
   - Make a flush tap. Use a 46 mm drill bit diameter
   - Increase the drill bit diameter to 46 mm for the next tap

2. **If on a single tap-hole operation, there is no slag after 60 minutes from opening the taphole:**
   - Increase the drill bit diameter to 46 mm for the next tap

If for the tap thereafter, there is no slag again after 60 minutes from opening the tap-hole, decrease the blast volume by 300 Nm^3/min. This must be done only if the blast volume is > 2800 Nm^3/min

Decision Tree 2 - Tapping guidelines for Blast Furnace D
Standard diameter = 46 mm

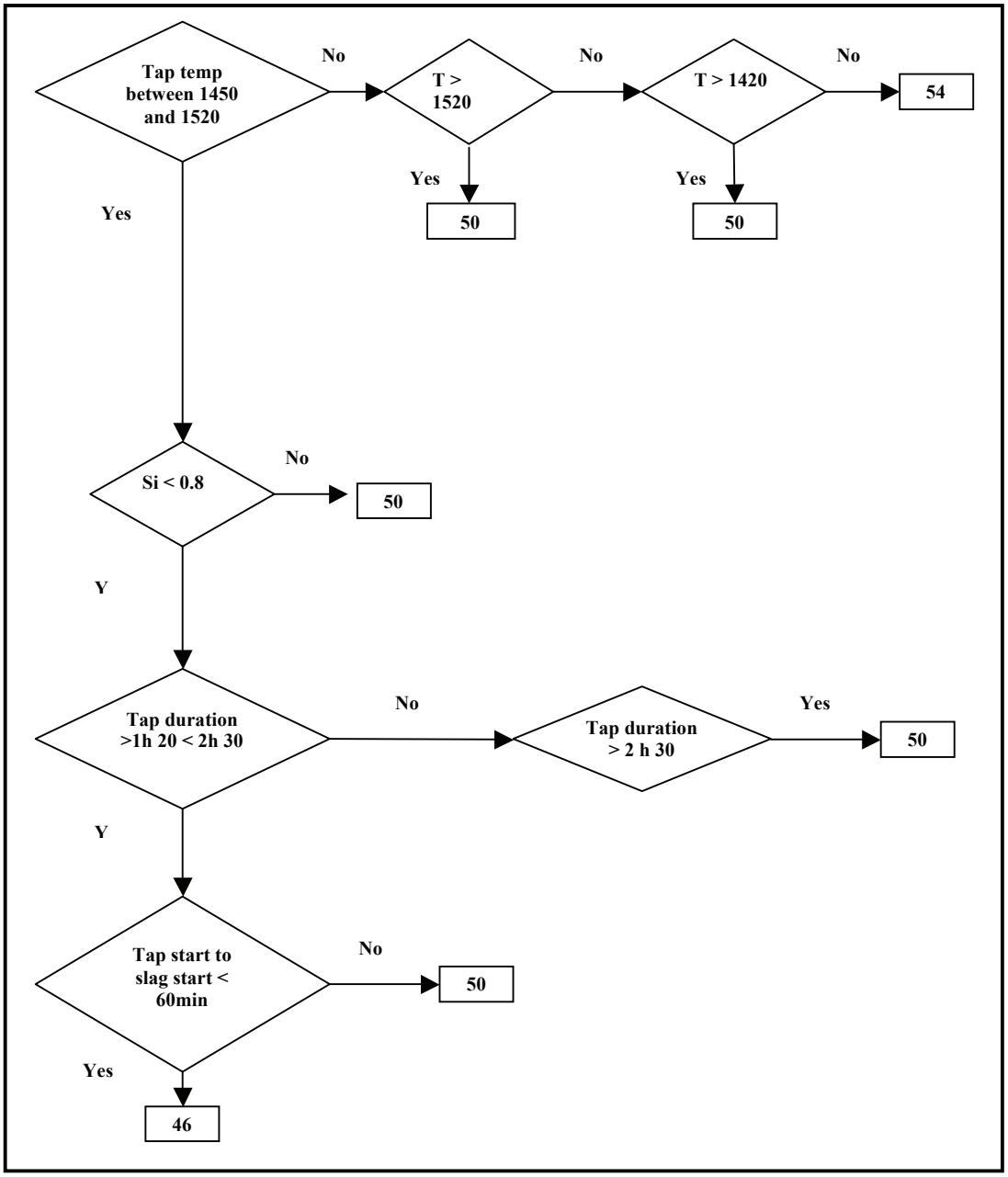

Other guidelines:

3. **If there is no slag after 60 minutes from opening the tap-hole:**
   - Make a flush tap. Use a 54 mm drill bit diameter
   - Increase the drill bit diameter to 50 mm for the next tap

4. **If on a single tap-hole operation there is no slag after 60 minutes from opening the tap-hole:**
   - If the blast volume is < 3800 m^3/min but > 3600m^3/min, decrease the blast volume by 200 m^3/min
   - Increase the drill bit diameter to 54 mm for the next tap

5. **42 mm drill bits must be obtained from the superintendents**
6. **If the tap-to-tap duration is longer than 20 minutes, use a 50 mm drill bit**
7. **If the tap-to-tap duration is longer than 30 minutes, use a 54 mm drill bit.**

The Author

Zulaika Halifa, ArcelorMittal

My career began with ArcelorMittal as a bursary student in 2006. In 2010, I began in ArcelorMittal's training program as a candidate engineer at Vanderbijlpark works at the blast furnaces. During my training there I obtained experience and training in blast furnace operation, continuous improvement (cast house operations), refractories engineering and business improvement. At the end of 2011 I moved over to the Sinter Plant where I did work mostly as a process engineer. In 2013 I returned to the blast furnaces to resume my duties as the furnaces refractory engineer which I currently hold.