# COMPUTERISED CONTROL FOR ROBOTICALLY APPLIED SPRAYED LINERS PROVIDING TECHNICAL, ECONOMIC, ENVIRONMENTAL BENEFITS AS WELL AS ADDITIONAL SAFETY FEATURES

Ian Northcroft, Manager Mining Europe, BASF Construction Chemicals
Christof Ziegler, Sales Manager, MEYCO Equipment, BASF Construction Chemicals

## Functional requirements for modern robotic equipment

There are several different driving forces behind the development of today's modern robotic equipment.

- A need for efficiency, safety and economy. Most robotic units will help in this respect, by allowing substantially higher shotcrete output and even set-up times may be reduced, using less people in the process.
- An increasing tendency to produce final linings using shotcrete rather than cast in situ concrete. The shotcrete placed will therefore have to satisfy quality and durability requirements normally used for permanent concrete structures.
- Computer controlled dosage of accelerator and other functions that contribute to a more uniform shotcrete quality.
- Thickness control and measurement contribute to providing the feature which has always been missing for sprayed liners
- EHSQ regulations especially relating to the generation of dust underground

## Summarised Description of MEYCO Logica Technology (Automated Sprayed Liner application)

These unique robots have 8 degrees of freedom enabling the operator to guide the spraying jets in various different modes depending on the conditions and situation of the rock

- Manual
- Semi-automatic
- Fully automatic

Except for the Manual mode, these modes all work from a pre-scan of the tunnel profile which is stored in the on-board computer and shown on a screen.
These features provide a multitude of "help options", allowing the operator to spray the most difficult zones and still obtain the specified thickness and simultaneously minimize rebound and fall-outs.
One further very important feature is the ability to scan the surface after spraying and through comparison determines the thickness of the sprayed layer.
The system is intended to enable the operator to use the robot as an intelligent tool, not to automate the entire job.

**Special Features of the System**

The following are some of the special features of the MEYCO Logica Technology.

- Semi-automatic spraying of side-tunnels and niches from the main tunnel, to a depth of 1.3 m from the main tunnel wall (MEYCO Logica 10).

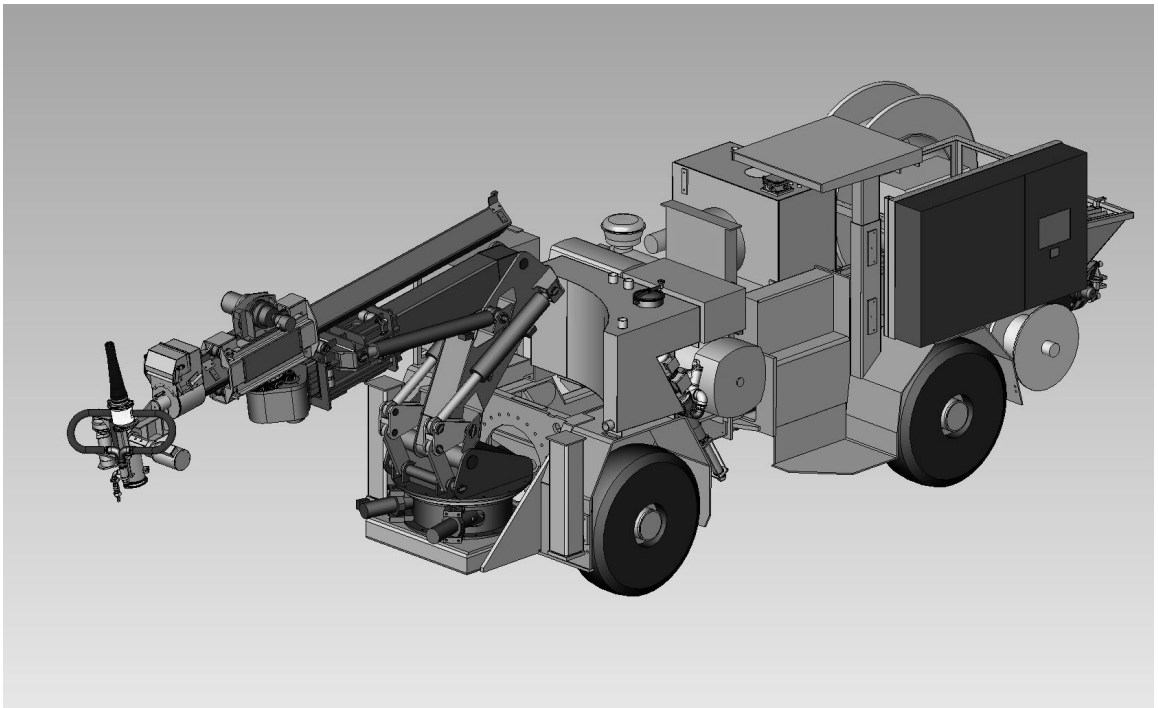

**Figure 1 MEYCO Logica 10 compact robot**

- Ergonomically radio remote control (2 joysticks) with all important operator functions for manipulator and concrete pump including reporting over a luminous text display.
- System diagnostics via the computer display (touch screen). With internet access or dial-up (GSM) connection, remote trouble shooting can be executed by MEYCO Equipment customer service worldwide.
- 3-D simulator of machine and measured tunnel for training of operators (without running the robot itself).
- Complete data-logging during operation: Flow rate and volumes of concrete and additives, scanned tunnel area, shotcrete mix design, time data, operation faults etc.


**Figure 2 MEYCO Cobra Logica with Logica 10 Robot**

**Practical experience**

The Westerschelde Project in the Netherlands is an example of a successful use of 2 MEYCO Logica systems to spray a 50 mm thick lining of passive fire protection mortar with a thickness tolerance of ±4 mm. The total tunnel length was 2 x 6 km.

In November 2005 a further MEYCO Logica 15 was operating in the Lainzer tunnel in Austria. This was placed on top of a rail mounted scaffolding 12 meters high and 24 meters wide. The concrete roof structure (hammer-head profile) was covered by sprayed concrete with PP fibres for fire protection. The layer thickness was 6-8 cm over a total area of 23,000 $m^2$. To be able to apply the material evenly and efficiently under very confined conditions, the control software of the robot was extended with an auxiliary module. It was therefore possible, as with a tooling machine, to adapt the path, spraying distance and angle of impact of the spraying jet. The programming was performed on a laptop in advance of application according to the given profile.

A MEYCO Potenza Logica robot was used for application of sprayable waterproofing membrane in a sub-sea road tunnel on the Faeroe Islands. The area was about 40,000 $m^2$ in a drill and blast environment and the membrane thickness control and productivity was excellent.

In Lebanon a MEYCO Potenza Logica was used to spray a waterproof membrane as part of the repair of Chekka Tunnel. A total of 18000 m2 was sprayed at a rate of 1600-1800 m2/day. Thickness varied from the target of 3.5mm by less than 0.5mm. This membrane was then covered using the same MEYCO Potenza Logica with a 50mm layer of PP fibre shotcrete.

Starting in November 2007 a MEYCO Cobra Logica sprayed the escape tunnel final lining Henndorf am Wallersee by-pass in Austria. The use of MEYCO Logica technology resulted in great savings in concrete consumption due to the required layer thickness being achieved with an exact and constant automated application together with rebound reduction.

For a new tunnelling method in Hindhead, England steel fibre reinforced final lining without additional arch reinforcement has been chosen, three MEYCO Potenza Logicas are in operation to measure the excavated profile before and after the spraying process. Thanks to the onboard display, the minimal required layer thickness can be checked before the machine leaves its position. This helps in saving time for respraying works or reprofiling in a later stage.

## Latest developments

### Automatic shotcreting robot with geo-referenced control

Scanning of the surface combined with external geo-referencing by a tracking total station results in a 3D-Model of the tunnel section where shotcrete shall be applied.

### Online profile comparison (pre-/post scanning)

After positioning of the shotcreting robot in the tunnel section the built-on rotational laser scanner measures the tunnel profile (up to 360°). During this process an external geo-referenced total station is tracking the position of the scanner so the measured data can be referenced to absolute coordinates of the tunnel project. After completion of spraying, the section can be scanned again in the same manner with this data and stored locally on the machine. This feature allows an onboard comparison between the pre- and post scan or, most importantly against the designed profile.
This gives the operator the possibility to have an immediate analysis and to check if the minimal required layer thickness was applied or, in the case of overspray of the concrete laye, which area has to be removed.

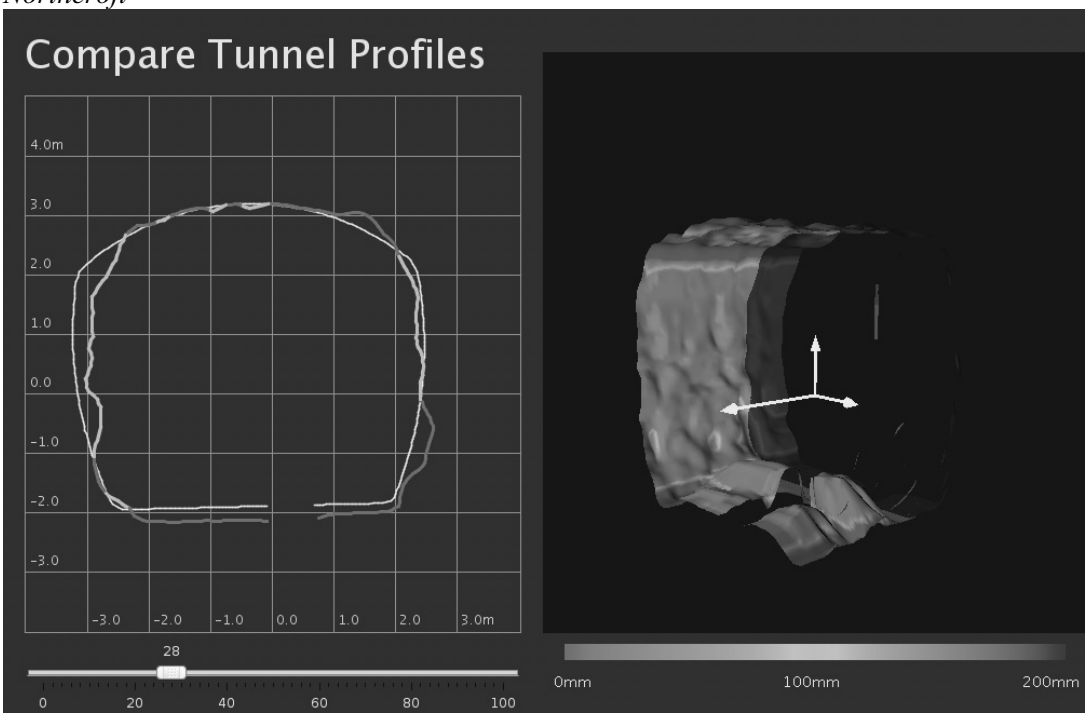


**Figure 3 Online profile comparison**

This set-up of a laser-scanner mounted on the headmost part of the robot together with a tracking total station further back allows a shadowless scanning of the profile (rectangular to the surface) and a increased accuracy of the measurement data.

All measured profiles can be exchanged between the machine and the office computer using a standard USB-Stick or by network (e.g. WLAN).
This data will now provide a complete project record of important criteria such as:-

- excavated profile,
- final sprayed shotcrete layer profile including the lining thickness
- all settings used for accelerator dosage and actual concrete volume sprayed


**Figure 4 MEYCO Logica Potenza at Chekka Tunnel, Lebanon**

**Conclusion**

There is no doubt that the technology and capability of sprayed liners has advanced significantly in the past few years and is close to what is now incorporated in modern drilling rigs.

The MEYCO Logica technology goes a long way to addressing the problems and doubts that the mining and tunnelling industry has had in the past.

It is now possible to accurately spray thin liners at a high rate, with precise thickness and efficiency. The system makes the application highly efficient in relation to material usage and will reduce rebound and dust generation significantly.

**REFERNCES**

Computer Controlled application of Shotcrete – A Status Report, K. F. Garshol and C. Ziegler, SUS-X Whistler Mountain 2006