THE USE OF HIGH-PRESSURE, WATER-HYDRAULIC (HYDROPOWER) TECHNOLOGY IN SOUTH AFRICAN NARROW-REEF HARD-ROCK MINES

P. Fraser Hydro Power Equipment (Pty) Ltd

Abstract

This paper examines the new water-hydraulic (hydropowered) drill rigs that have been developed and proven in the last decade primarily in tabular, shallow-dipping, narrow-reef hard-rock South African mines. These include drill rigs for flat-end tunnel development, narrow inclined raises and winzes, large inclines and declines and longhole-based developments such as ore passes and vent raises. The hydropower technology rigs offer advantages both in safety and performance over traditional compressed-air-powered, hand-held development, and are generally more cost-effective than imported oil electro-hydraulic drill rigs. Furthermore, hydropowered rigs are inherently energy-efficient. The benefits of hydropower are discussed and a 'comprehensive development model' is presented which demonstrates that ore-bodies can be accessed in significantly shorter times. 'Localized' half level hydropower systems are introduced and a range of ancillary equipment available is listed.

Introduction

According to Neville Nicolau, CEO of Anglo Platinum, 'Safety is our moral licence to operate' and, 'if we don't get our safety right, then you must expect society to take away our licence to operate, and then we would be responsible for closing mines and destroying work [1]. While the long-term trend in the Fatal Injury Frequency Rate (FIFR) is downward, fatalities are not acceptable to any of the stakeholders in the mining industry or investor community. Safety is therefore a non-negotiable imperative.

While there are many causes of fatal accidents, only one single intervention can address nearly 50 per cent of all the accidents, as shown in Figure 1. That 'single intervention' is relocation of the operator back from the rock face under permanent support away from the 'high risk' zone.

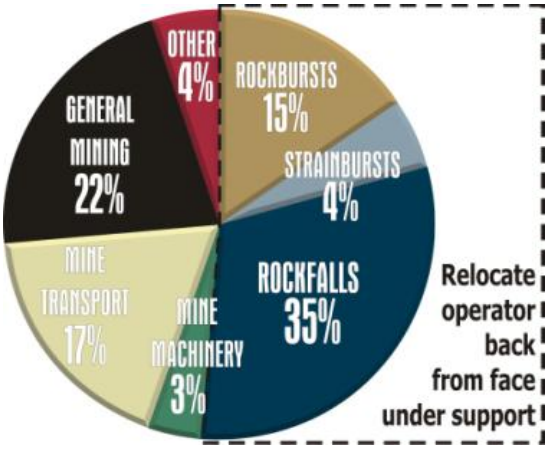

Figure 1-Mine death causation factors (Mining Weekly, 2008[2]).

In the past 12 years Hydro Power Equipment (HPE) has developed a number of drill rig mechanization solutions that have enabled the operator to be moved back from the face under permanent support. The application of high-pressure water hydraulics technology (hydropower) to power these rigs has enabled advance rates to be improved compared with conventional compressed–air-equipped mines—typically South African narrow tabular, steeply-dipping gold and platinum mines. This is primarily due the higher performance of the water-powered drills.

The Eskom energy supply constraint, and more importantly, the substantial electricity price hikes, have encouraged miners to look for more energy-efficient methods such as hydropower. This, together with generally sub-minimal air pressures in development ends at the extremities of mine compressed-air networks, has seen the development of 'micro hydro systems'. These consist of a small power pack which raises the pressure of the mine service water to about 18 MPa and via small-bore pipe network (typically 50 mm NB or less up to 300 m long) delivers energy to drill rigs, loaders, and ancillary equipment.

'Micro hydro systems' are being followed by larger 'localized hydro systems' or 'half level systems' where the concept is expanded to include production stoping and development. A halflevel system includes pumps to power, say, 16 drills (16 l/s) and require 300 m of 65 mm NB piping (centre raise) and 800 m of 32mm NB pipe (gullies).

Such 'plug-and-play' modular systems are quick to supply, install, and commission and are easily relocated as mining progresses. They are equally suitable for existing mines (i.e. opening a new remote section) or in new mines.

This approach eliminates the need for large compressor complexes, which typically cost about R170 000 for every drill to be powered, and enables cash flows to be delayed until just before mining commences. This, combined with increased face advances, promotes the safe and rapid development of mines.

Hydropowered drill rigs

HPE design approach to mechanization is different from that used in traditional oil electro-hydraulic trackless equipment. HPE has attempted to keep the rigs as simple as possible while at the same time increasing the power by using the higher pressures of hydropower. The rigs are essentially mechanisms to mechanically align the blastholes for optimum accuracy with minimum operator discretion. This 'simplicity + power' approach has enabled rigs to be delivered at 20 per cent of the cost of conventional oil-hydraulic rigs, but with most of their capability.

Hydropowered rigs are fed from a hose connected to a pipe manifold fed from the pressure source. The valves in the rig are staple-lock connected to allow faulty units to be easily replaced by the operator.

Flat-end development drill rig—universal or UniRig

The UniRig shown in Figures 2 and 3 is designed as a single rig capable of both face, side- and hangingwall drilling. It has two independent booms and a pantograph mechanism to assist in optimally directing the holes. This mechanical alignment is carried out by two unequal pantographs (one horizontal, and one vertical) that 'fan' the hole directions giving the correct drilling angles for all holes, including the perimeter holes. This means that the drill feed does not have to be rotated, which simplifies the rig construction and operation.

Hundreds of development-end rigs of all types have been delivered, indicating that this form of appropriate mechanization is well established. These are reported by Fraser[3,4] and Sachse[5,6]. The UniRig typically drills a 3 m wide x 3.5 m high tunnel as shown in Figures 4 and 5. It has an extendable boom that when contracted can drill a 2.1 m sidewall hole in a 3 m wide excavation. When extended and fitted with a longer drill steel, a 2.75 m blasthole can be drilled in the face giving an advance of 2.5 m per blast. A pattern of say 60 holes (including two pilot holes and a nine-hole burn cut) can be drilled in three hours with two drill feeds. In a typical single end without multi-blast ventilation (i.e. only one blast per day), a development rate of 45 m per month is achievable. With twin ends available this can increase to 60 m per month per rig. Trackless versions have also been manufactured, as shown in Figures 6 and 7.

Figure 2-The Universal or 'UniRig'

Figure 3- The Universal or 'UniRig'

Figure 4-A return air way (RAW) developed. This site has regularly achieved 120 m/month on twin ends for several years at costs competitive with hand-held drilling

Figure 5-A break-away drilled at 3200 m depth

Figure 6-UniRig mounted on a 4-wheel-steer utility vehicle

Figure 7-UniRig transported on a LHD bucket

Raise drill rig

The raise drill rig shown in Figure 8 is mounted on a tubular monorail track suspended from the hangingwall. It is driven by a positive-displacement motor driving a gear in a rack welded on the underside of the monorail. The drive unit includes multiple braking systems and an over-speed sensor. The rails are supplied in 1.5 m lengths and are joined with a single bolt. Importantly, the semi-rigid connection shares load between adjacent supports. Standard left, right, up, and down rail segments and switch allow the rail to follow the reef rolls, negotiate bends, and turn on to branch rails.

The raise drill rig is capable of drilling face, side-, and hangingwall holes and achieving an advance of 2.5 m per blast as shown in Figures 9 to 12. The unit can also do T-raises, and ledging. The rig is sufficiently high above the footwall to pass over a scraper or about a metre of broken ground not yet cleaned from the raise.

A key advantage of the raise drill rig is that it transports all the materials needed to do the job to the face (e.g. drill steels, roof bolts, explosives, etc.) and this means that the advance rate is not affected by the length of the raise as is the case with hand-held raising.

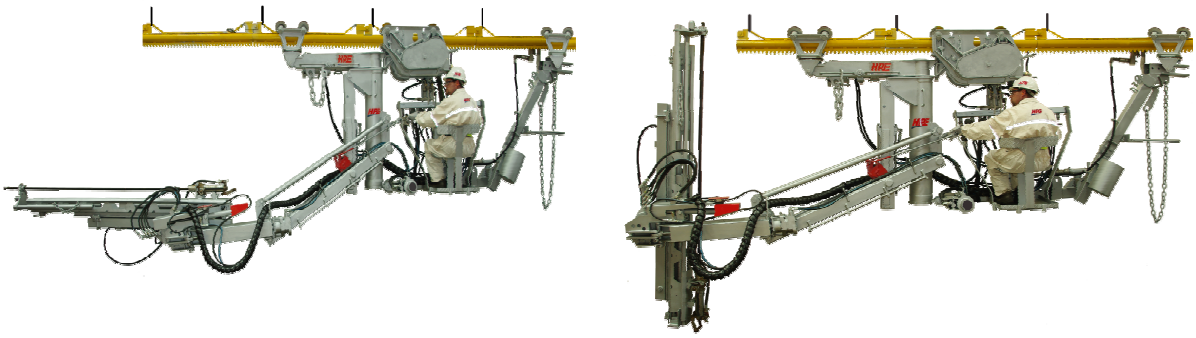

Figure 8-The raise drill rig

Figure 9-Accurate drilling results in a safe, accurate, and precise excavation

Figure 10-The straight and smooth footwall achieved by the raise drill rig improves the effectiveness of the scraper and the life of the scraper rope

Figure 11-A 3 m x 3 m x 34 degree inclined travelling way developed with the raise drRig

Figure 12-A 3 m x 3 m chairlift excavation developed with the raise drill rig

The monorail track can either be recovered and used for the next raise or left in place and used by a monorail transporter during the stoping phase. A monorail transporter is capable of carrying a 55 kW winch up a 34 degree travelling way and to the winch bed as shown in Figure 13.

Figure 13-A monorail transporter carrying a winch up a travelling way

The raise drill rig typically drills a 1.5 m wide x 2.8 m high raise or winze. It can also drill 3 m wide excavations up to 3.2 m high. It also has an extendable boom that, when contracted, can drill a 2.1 m sidewall hole in a 3 m wide excavation. When extended and fitted with a longer drill steel a 2.75 m blasthole can be drilled in the face, giving an advance of 2.5 m per blast. A pattern of, say, 30 holes (including 2 pilot holes and a 9 hole-burn cut) can be drilled in three hours with a single drill feed. In a typical a development rate of 45 m/month is achievable.

Incline/decline rig

The incline/decline rig shown in Figure 14 is the 'big brother' of the raise drill rig and is designed to develop large steeply-inclined developments. It is supported off the same monorail, but can drill large excavations up to 5 m x 5 m. In this case two drill rigs mounted on separate rails on the left and right side of the face are used. In steep inclines, an overhanging face makes marking-off, barring, and charging-up more risky. To address this, an access basket rig mounted off a third, centre rail has been provided.

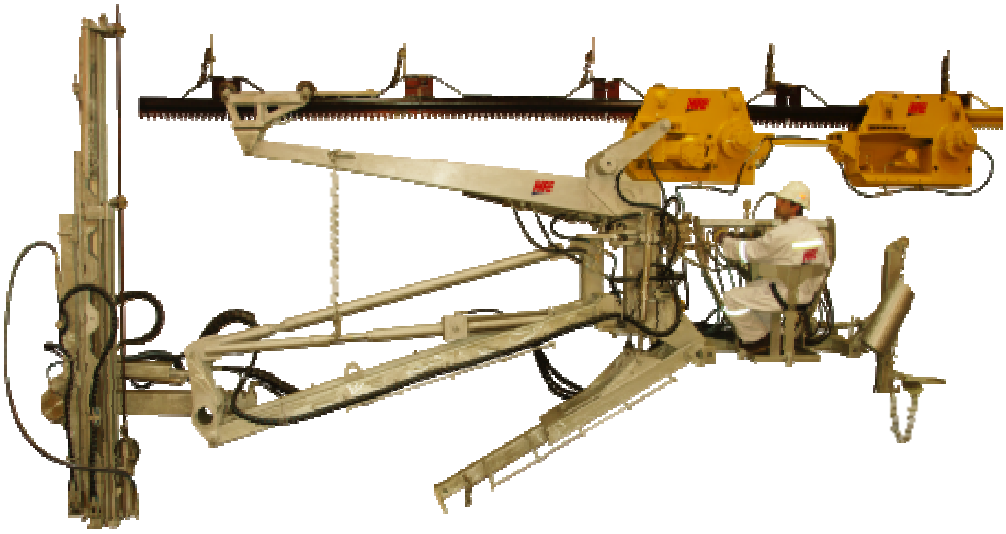

Figure 14-Incline/decline rig

Performance is similar to that of two raise rigs.

Longhole rig

The Wassara water-hydraulic In-The-Hole (ITH) Hammer was developed in Sweden by the iron ore mining group LKAB. Their initiative was based on their need to drill long holes accurately. Top hammers cannot deliver energy to the face efficiently via long drill steels with many joints. However, by impacting the bit in the hole, the energy transfer is direct and therefore efficient. The development of the Wassara ITH hammer saved LKAB over R1 billion in drilling costs, and the increase in accuracy achieved due to using a larger drill pipe meant that the inter-level spacing in their mines could be increased, resulting in further significant savings.

Figure 15-The standard longhole rig on X-Y slide base which aids drilling parallel adjacent holes

Figure 16-The compact longhole rig. An alternative 'tip-up' base for drilling drain holes has also been developed which facilitates drilling a 165 mm hole between levels in 24 hours--including set-up, drilling, and re-location

Using the inverted drop-raise method, ore-passes can be pre-drilled from the X-cut while the raise is being developed, and only blasted once the raise intersects the holes, thus saving time. The ore pass can be developed safely without a man having to enter the excavation.

The suitability of this method of drilling ore passes compared with other methods (e.g. hand-held drilling, drilling downwards from the raise, raise boring etc.) is well explained in Sachse[7].

Figure 17- A typical drill pattern for a 1.5 m diameter ore pass

Figure 18-Ore pass blasted in 13 m round

The ore pass can be blasted in a few rounds and with a dog-leg. Importantly, the mouth of the hole where the box-front and chute is attached can be blasted to the exact size without incurring blast damage (resulting in additional costly concrete and support reinforcement).

Shorter boxholes with a 'dogleg' can also be drilled from below in the X-cut and then blasted in three stages: two blasts charged from below creating the 'dogleg' followed by a series of blasts charged from above.

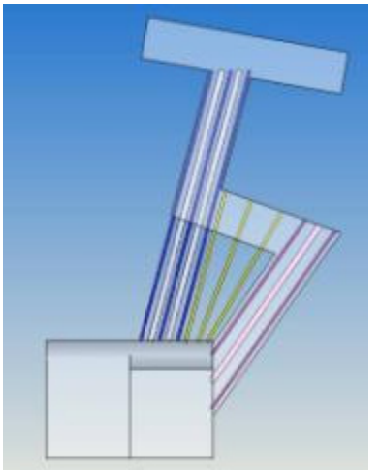

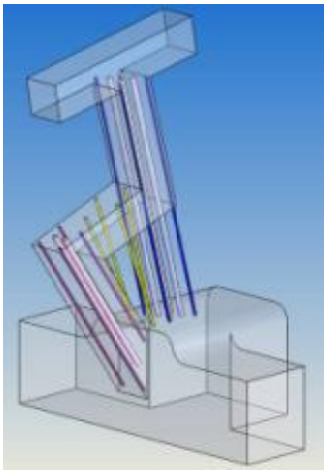

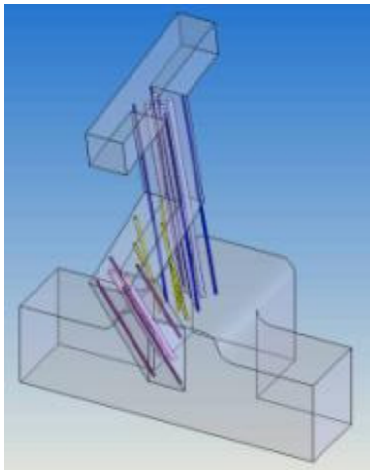

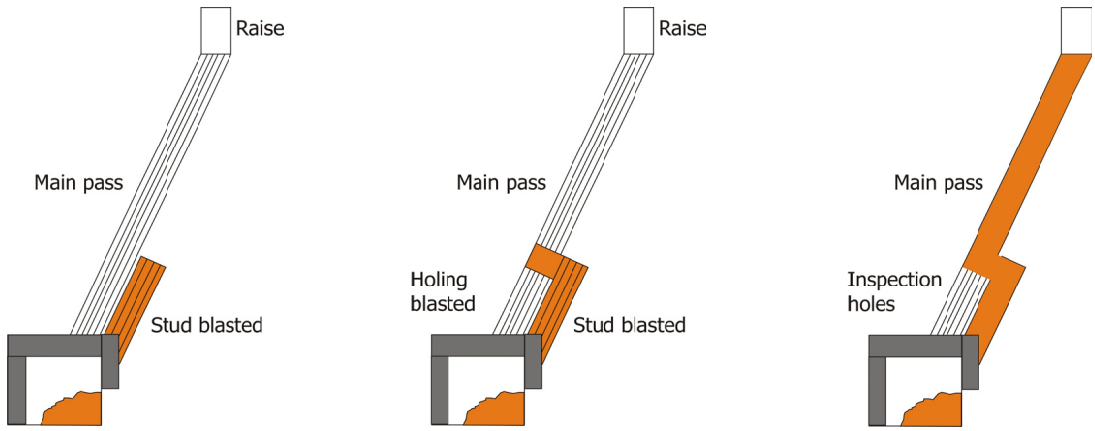

Figure 19-Sequence of drilling and blasting a 'dogleg' boxhole from below

The Long Hole Rig (LHR) has also been used to drill vent raises.

Figure 20-An excellent quality, 3 m diameter, 52 m long vent raise developed with the LHR

The LHR shown in Figures 15 and 16 has also been used to drill numerous drain and cable holes. To date, the longest hole drilled is 132 m. It has also been used for exploration drilling, cover drilling, and travelling ways.

The LHR drills a typical 115 mm hole at a rate of 0.3 m per minute. The net drilling rate depends on the hole length, rock type, and the number of rod changes and bit sharpenings etc., but is typically 10 m per hour.

The LHR can be set up or stripped down in single shift and transported to a new location in an additional shift (mine logistics permitting!) It is possible to complete a 30 m boxhole in a week. Drain holes can be reamed to 165 mm or larger if required. Up-holes are easier to drill than down-holes because the chippings are more easily flushed out, but both are possible.

Figures 17 to 20 show the drill pattern excavations and the sequence of operation for creating a 'dog-leg' boxhole.

Comprehensive development model

In this model the effects of faster flat-end development of the haulage and X-cut, faster development of the raise, and faster development of the ore-passes are compared with conventional compressed-air drilling rates of advance. The combined effect suggests that it is possible to access the orebody nine months earlier with hydropowered drill rigs, as shown in Figure 21.

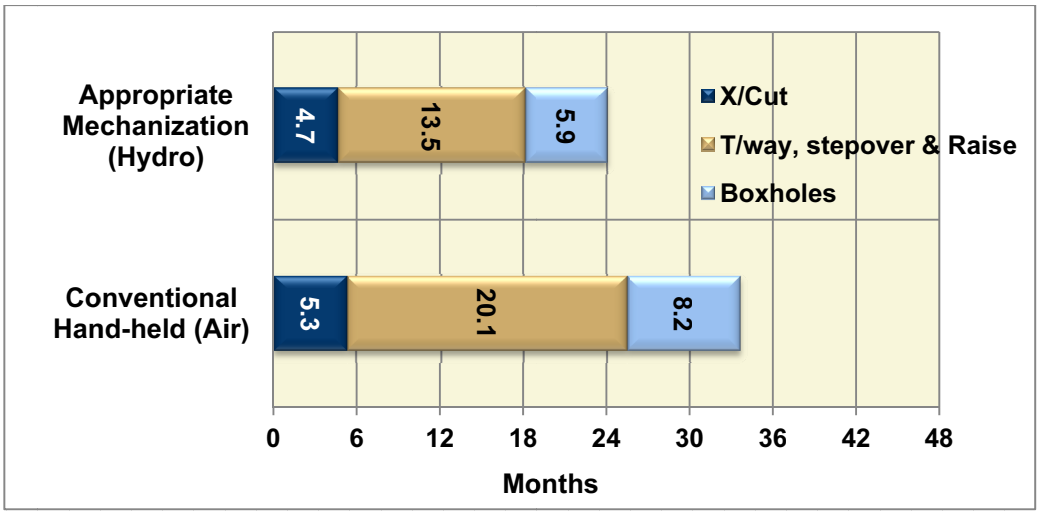

Figure 21-Bar chart showing the total development time (for flat-end, raise, ledge, and ore passes) using the hydropowered rigs compared with conventional hand-held drilling

Stope drill rigs

Of all the areas to mechanize, the narrow, dipping stope is the most difficult. The SAFE Stope Drill Rig shown in Figure 22 is designed to embody the best features of the many previous efforts 9Eksteen[8], Fraser[4]). Fundamentally, it consists of a single boom and clamping post mounted so it can slide along a short rectangular rail. The rail is mounted on wheels/skids and stabilized by an 'outrigger'.

The rig is tethered up-dip and down-dip by a webbing strap to prevent it moving down-dip under gravity. A water turbine drive allows either the movement of the whole rig along the strap, or alternatively for the movement of the boom and post along the fixed rail. The rail is similar to that of the prop-mounted 'stope jig', but without the effort of having to move, install, and remove the rails. Additionally, the movement of the boom and the powered drive assist in the process of negotiating a path around the face support props. Like a stope jig, the rig uses the straight rail and the direction of the strap as a datum to assist in directing the drill holes. The operator is located behind the rig more than two meters from the face under permanent support. A simpler rig has been designed for dips less than eleven degrees.

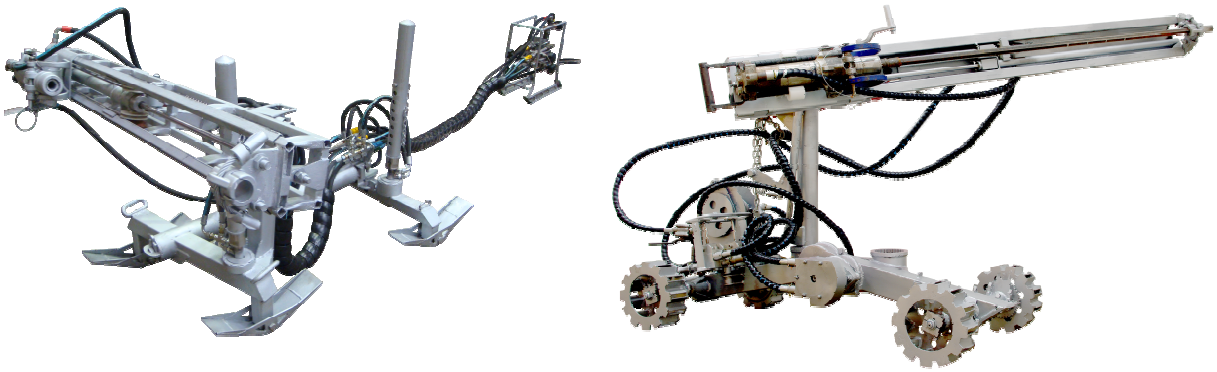

Figure 22-The 'walker' and SAFE Stope Drill Rigs

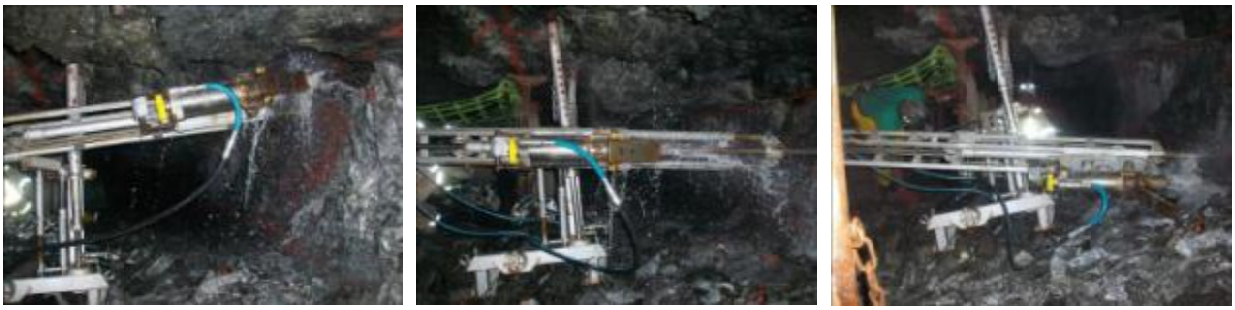

Top *Middle* *Bottom*

Figure 23-The 'Walker' rig underground with the boom mechanically aligned for the top, middle ,and bottom holes thus facilitating consistent, accurate hole positioning and alignment

Figure 23 shows the mechanical 'auto-alignment' of the top, middle and bottom holes drilled with the Walker stope rig.

A monorail-mounted longhole stope rig is also under development. In this system a standard raise drill rig will be used to pre-develop the raise and strike gullies and a second rig, supporting a long hole drill feed, will drill stoping blast holes.

Half-level systems

An independent reticulation system with its own high-pressure pump/s capable of powering all the mining operations at one end of a level is known as a half level localized hydropower system. It uses mine service water and boosts it to hydropower pressures and delivers the pressurized water to the rigs etc. through small-bore pipes (32 to 65 mm NB) and hoses (15 to 25 mm NB). Such systems are quick to purchase and install and are easily relocated later. It is possible to introduce these in specific locations in existing conventional mines when compressed air is either limited or not available at sufficient pressures. In this way hydropower technology can be incrementally implemented in a complementary manner with existing systems. Figure 24 shows a typical half level layout.

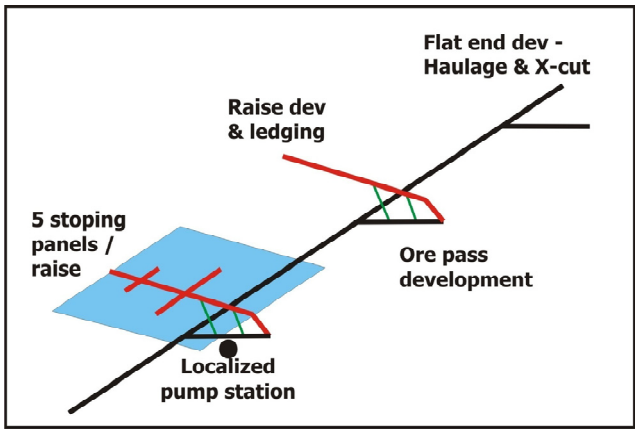

Figure 24- A typical half level layout

(Note: the 'half' refers to one side of the level e.g. the north side, and should not to be confused with the term 'half level' meaning an inter-level between two levels).

Benefits

Safety, health, and environment

The 2013 milestones agreed between industry, labour, and the South African Government include reducing the fatal injury frequency rate (FIFR) in line with ever-improving global targets, reducing fall-of-ground (FoG) accidents, reducing noise-induced hearing loss (NIHL), reducing dust-related health issues, and addressing the TB/HIV challenges.

Powerful, rig-based solutions offer significant safety benefits as discussed above. Fraser[9,10] details attempts to quantify these benefits. Furthermore, faster drilling reduces drilling time and hence the time exposed to risk.

Other benefits include:

- Absolute noise levels are reduced (compared with air)
- Noise exposure times are reduced due to faster drilling
- Operator's ear is further from the drill, reducing the intensity of sound reaching the operator
- No vibration is transmitted to the operator as the drill is mounted on a rig
- Excellent local cooling
- No airborne grease or carcinogenic oil mist
- No oil contamination of the footwall or ore
- Better visibility due to absence of fogging
- Excellent dust suppression.

Mining method suitability

The 'drill-and-blast' method is the industry standard and is well understood even if it is not optimally implemented with conventional hand-held drilling. Hydropowered rigs have been developed to meet the needs of existing mine operations and offer improved drilling rates, increased advances, better fragmentation, higher grade (less dilution), and less blast damage to support. This translates into faster development, more face advance, and better grade with the same workforce.

Job attractiveness

Today, few job-seekers aspire to become rock drill operators due to the nature of the job and changed expectations in our society. Hydropowered drill operation is much less physically arduous than convention hand-held air drilling and offers a more attractive 'rig operator' job, thus attracting a new generation of mine worker.

Energy efficiency

The use of the chemical energy in explosives to create tensile fractures in the hard rock in the 'drill-and-blast' method is inherently energy-efficient. However, in order to blast the rock it is necessary to drill the blasthole efficiently. The relative effectiveness of various energy-delivery mediums to deliver energy to the rock via a drill is quantified in Fraser[11]. Hydro drilling uses 20 per cent of the energy required for compressed-air drilling.

Cost effectiveness

Table I shows the relative costs of the main cost-drivers of compressed-air stope drilling and hydropowered stope drilling.

Table I-Approximate relative cost of compressed-air stope drilling versus localized hydropower drilling

Rand / m drilled	Air	Hydro
Energy	10	3
Drill maintenance	1	5
Steels and bits	2	3
Drilling labour	13	10
System maintenance	0	2
Total (R/m drilled)	26	24
No. of drillers for 30 m panel; 213 holes / panel; 14 m advance per month	4	3

Development rigs are significantly less costly to purchase than imported electro-hydraulic machines and are less costly to maintain in the 3 x 3 m ends found in track-bound South African mines.

Technology maturity

While hydropowered drill rigs are relatively new, having been developed within the last decade, hydropower drilling has been in use for 20 years and is no longer 'novel'. The technology maturity is shown not only by decreasing real costs, but adoption globally (e.g. the Wassara hammer).

Hydropower is a versatile, clean, and safe energy delivery medium and can be used to power cylinders, motors (positive-displacement and turbine), venturi devices (jet pumps and hydro compressors), and drills. The control of flow and pressure from the very small to the large valve is the underpinning technology of hydropower, and this has been developed over the last 30 years. The philosophy of 'dirt-resistant' water hydraulics is what has set the South African hydropower technology apart from 'clean fluid' hydraulics used elsewhere.

A wide range of ancillary equipment is available to complement the drills and rigs.

Conclusion

Appropriate mechanization using simple hydropowered drill rigs fits well with the existing drill-and-blast method, which is well understood. The fact that drill-and-blast mining is not optimally executed, due to the intrinsic limitations of hand-held drilling, has created a huge opportunity for devising simple methods for drilling accurately. The early fruits of this approach have been demonstrated over the past decade and are well understood.

Hydropower is an energy-efficient energy delivery medium that can be used to reduce or eliminate dependency on compressed air. If properly implemented, the use of localized hydropower offers a safe, clean, efficient, powerful, fast, 'single hose', cost-effective, proven alternative to compressed air with significant upside.

A wide variety of drill rigs and ancillary equipment is available to replace existing air-powered equipment.

Importantly, hydropower technology offers a strategic opportunity to meet the challenges facing the narrow-reef mining industry on a new technology platform. Ultimately, however, it will be the absolute necessity for safety that will drive hydropower and appropriate mechanization.

This technology can be incrementally implemented in new and existing mines, and in the process offers benefits to all stakeholders: shareholders, management, labour, Eskom users, and the Nation.

Acknowledgements

This paper was presented at the AUSIMM Narrow Reef Conference in Perth, 24 March 2012, and permission to republish is gratefully acknowledged.

References

1. Nicolau, N. Telephone interview. *Mining Weekly*, 13 May 2008.

2. Mining Weekly. Fatality rates in mining in SA. *Creamer's Mining Weekly*, 1-7 Feb. 2008. p. 9.

3. Fraser, P.D. Saving energy by replacing compressed air with localized hydropower systems: a 'half level' model approach. *Third International Platinum Conference. 'Platinum in Transformation'*, Sun City, South Africa, 5-9 October 2008. The Southern African Institute of Mining and Metallurgy, Johannesburg. pp. 285-292.

4. Fraser, P.D. Appropriate mechanisation using simple hydropowered drill rigs: a comprehensive, strategic response to the challenges facing hard-rock, narrow-reef, dipping-tabular ore body mining in South Africa. *Third International Platinum Conference. 'Platinum in Transformation'*, Sun City, South Africa, 5-9 October 2008. The Southern African Institute of Mining and Metallurgy, Johannesburg.

5. Sachse, U. and Minnitt, G. The development end drill rig: a case study on implementation new technology in the South African mining industry. Colloquium, *Knowledge and Technology Transfer*, 26 February 2002. The Southern African Institute of Mining and Metallurgy, Johannesburg.

6. Sachse, U. High-speed, flat-end and raise development using micro-hydropower systems. *Rise of Machines,* 14-16 March 2007. The Southern African Institute of Mining and Metallurgy, Johannesburg.

7. Sachse, U. Rockpasses: a guide to methodology. Colloquium, *Design, Development and Operation of Rockpasses*, 16-17 November 2004. The Southern African Institute of Mining and Metallurgy, Johannesburg.

8. Eksteen, W.M. Implementing mechanisation in stoping narrow tabular ore bodies. Colloquium, *New Mining Methods and Systems for Narrow Reef Mining*, 29 July 1999. The Southern African Institute of Mining and Metallurgy, Johannesburg.

9. Fraser, P.D. and Coelho, M. The use of drill rigs to improve safety and reduce noise induced hearing loss and hand arm vibration levels. *Second Hard Rock Safe Conference*, Emperors Palace, Johannesburg, 4–6 August 2010. The Southern African Institute of Mining and Metallurgy, Johannesburg, 2010.

10. Fraser, P.D. Hydropower technology can assist in meeting the Safety and Health '2013 Milestones' and save energy. *Fourth Internatinal Platinum Conference. Platinum in Transition 'Boom or Bust'*, Sun City, South Africa, 11–14 October 2010. The Southern African Institute of Mining and Metallurgy, 2010. pp.259–266.

11. Fraser, P.D. The energy and water required to drill a hole. *Fourth Internatinal Platinum Conference. Platinum in Transition 'Boom or Bust'*, Sun City, South Africa, 11–14 October 2010. The Southern African Institute of Mining and Metallurgy, Johannesburg. pp. 211–221.

12. Kendal, R.J. and Eksteen, W.M. Hydropowered mechanisation in tunnels. AITES – ITA 2000 World Tunnel Congress 'Tunnels under Pressure'. Durban, South Africa. The Southern African Institute of Mining and Metallurgy, Johannesburg.

The Author

Peter Fraser, *Professional Engineer*, Hydro Power Equipment (Pty) Ltd

Peter Fraser is a Professional Engineer and holds Masters Degrees in both Mechanical Engineering and Business Administration. He started his career with the Chamber of Mines Research Organization and has been with Hydropower Equipment (HPE) since 1997 where he heads the innovation segment. HPE has developed the use of high-pressure water (hydropower) to power mining equipment, to improve the local working environment and to save energy. Peter is a member of the SA Institution of Mechanical Engineers and The SA Institution of Mining and Metallurgy.