Improving the trough opening process at Premier Mine utilizing electronic delay detonators

by H. Möhle*

Synopsis

Premier Mine is a large underground diamond mine, situated at Cullinan in the Gauteng Province of South Africa. The mine hoists over 3 millions tons of diamond bearing kimberlite per year, from a modern, mechanized panel retreat block cave mining operation.

Troughs sited at the base of the cave are developed into the overlying caved ore, allowing loading access to the ore through drawpoints. Trough opening is therefore a vital aspect of the mining operation. Most of the production is dependent on fast, reliable and safe trough opening. Successful trough openings are achieved under difficult mining conditions due to restricted void, long up-holes and the inherent properties of kimberlite—soft, elastic rock with a high swell factor.

Early in 1998, Premier Mine undertook a joint development project (with an electronic initiation system supplier) to determine whether the use of a fully programmable electronic detonator system would enhance the mining cycle in the trough opening process.

Blasting commenced in February 1998, initially with blasts of a similar size and duration to those that had been previously blasted with shock-tube systems, to confirm the operational capabilities of the blasting system. The accuracy, reliability and flexibility of the electronic delay detonators (EDDs) minimized associated risks for re-engineering of the trough opening process. Further, as blast timing was optimized, larger blasts were successfully initiated. To date over 20 troughs have been opened successfully with the use of EDDs. Not only did it take less time to open troughs, but also drilling and blasting operations have been optimized, as well as an overall improvement in safety.

This paper details the benefits that EDDs have delivered to Premier Mine in this area. The logic followed is:

- Review of the original trough opening practices
- Re-engineering of the trough opening process
- Implementation of EDDs
- Evaluation of improvements and conclusions.

Premier Mine

Background

Premier Mine is located at Cullinan (40 km east of Pretoria in the Gauteng Province) in South Africa. See Figure 1. The mine started operations in 1903. Mining was stopped during the period between 1932 to 1945. Underground mining recommenced in 1947. To date Premier has produced over 300 million tons of kimberlite and 120 million carats of diamonds. Premier has produced a number of large diamonds of which the Cullinan diamond of 3106 carats is the most famous; in fact 25 per cent of the worlds +400 carat stones originate from Premier Mine.

Geology

Diamond-bearing kimberlite ore is mined from a single kimberlite pipe, consisting of numerous kimberlitic intrusions. The host rock is quartzite, norite and felsite. A 75 m thick gabbro sill cuts the pipe at a depth of 380 m. See Appendix A for the geology of the pipe.

Kimberlite, especially the Tuffisific Kimberlite Breccia (TKB) kimberlite, has a high clay content, which leads to the rapid decomposition of the rock mass when exposed to water and even the humidity in the air. Although dry drilling is employed within the kimberlite, drill holes that are exposed to the

Figure 1—Location map of Premier Mine

* *Drill and Blasting Engineer, De Beers Premier Mine, 1999.*

 SA ISSN 0038–223X/3.00 + 0.00. Paper received Oct. 1999; revised paper received Mar. 2000.

atmosphere over a long period tend to close. This closure of holes leads to poor blasting efficiency.

Further relevant ground condition parameters are shown in the Table I below.

Mining method

Since 1993, panel retreat block caving has been the mining method in use at Premier. In principle, panel retreat block caving entails that only the required number of drawpoints are undercut and developed to satisfy production requirements, thus:

- after a short maturing phase, drawpoints produce at maximum capacity until depleted
- individual drawpoint life is kept to a minimum, and
- the minimum initial capital expenditure is required in terms of development and support, to sustain the production requirements.

As only the requisite number of drawpoints are in operation at any one time, a new drawpoint has to have matured (into full production), as soon as another mature drawpoint becomes depleted (continuous replacement).

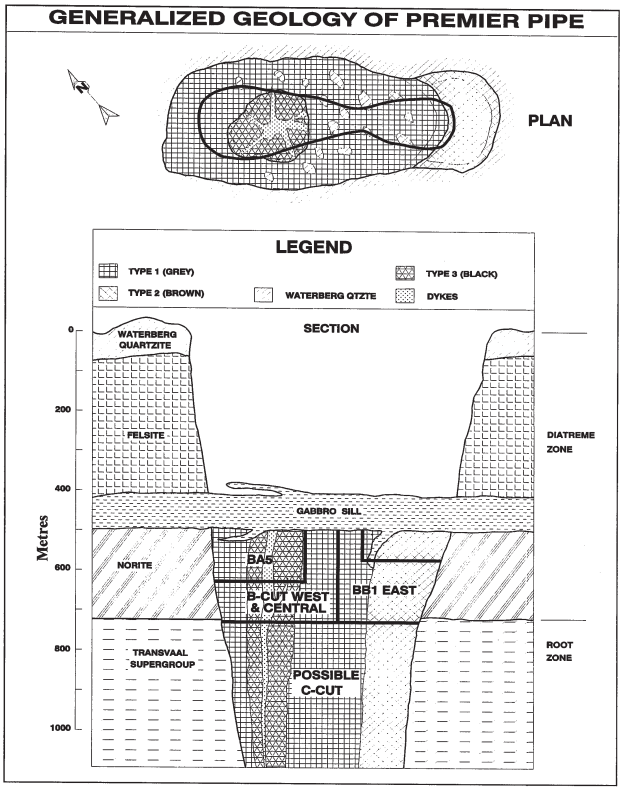

Appendix A

Table I

The characteristics of kimberlite that are relevant to blasting

Parameter	TKB	HYP
UCS (MPa)	50–110	110–160
E (GPa)	20	43
μ	0.25	0.28
RMR	50	55
MRMR	25	33
SG (tons/m^3) (*In situ*)	2.67	2.67
SG (tons/m^3) (Broken)	1.67	1.8
Swell factor	38%	33%

TKB = Tuffisific Kimberlite Breccia
HYP = Hypabyssal Kimberlite
RMR = Rock Mass Rating
MRMR = Mining Rock Mass Rating

Layout

The layout consists of an extraction level where the caved ground is loaded and an undercut level (located 15 m above the extraction level), from which caving is initiated. A more detailed description of each level follows:

Extraction level

The layout and the functionality of the extraction level is described below. Appendix B shows a layout of the extraction level. The plan geometry is based on the staggered herringbone layout. Production tunnels traverse the orebody from north and south rim tunnels. Tunnels to access the drawpoints are developed off the production tunnels at an angle of 55 degrees every 15 metres (see Figure 3). An individual trough layout is utilized instead of the more conventional continuous trench layout. Lateral pillars known as minor apices separate these individual troughs (see Figure 4). This layout requires that a slot be cut for each individual trough.

To further improve on the stability of the extraction level rockmass, the trough is developed after the undercut has advanced over the trough. The trough is therefore developed in de-stressed ground, with the cave already initiated. This mining sequence is termed advance undercutting.

The trough is excavated to hole into the overlaying cave, which allows the caved ore to gravitate to the extraction level. With reference to Figure 2, these troughs are funnel shaped increasing in size from 4 metres wide by 11 metres long on the production level to 15 m wide by 11m long as they break into the undercut level. The caved ore is loaded by 5 cubic yard LHD units from drawpoints (4.0 m x 4.0 m dimensions) that form part of the trough.

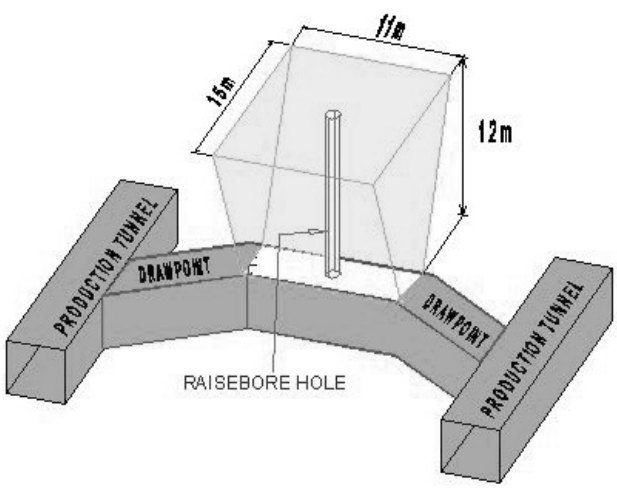

Figure 2—Isometric view of a single trough

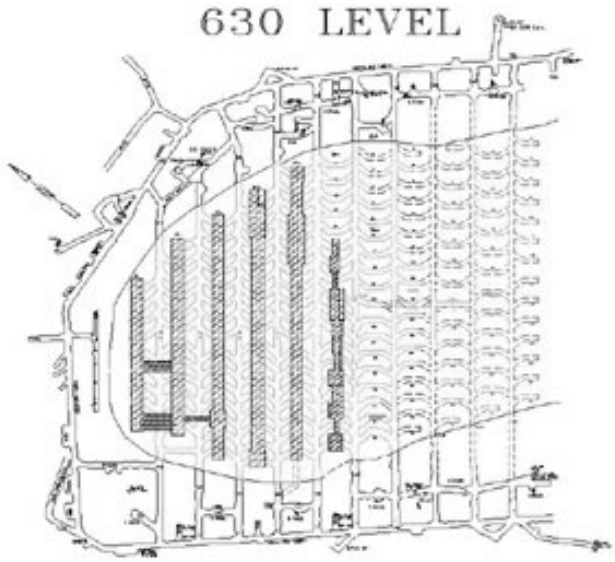

Appendix B

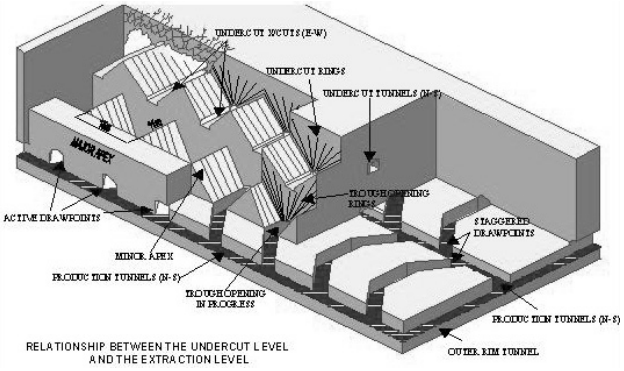

Figure 3—A 3-D model of cave mining method, on the herringbone layout

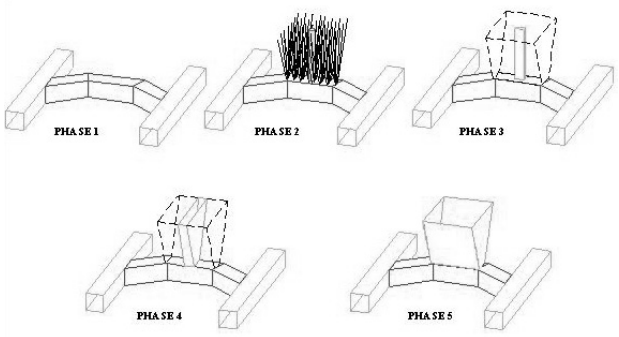

Figure 4—An isometric (3-D) illustration of the trough opening process

Undercut level

The purpose of the undercut level is to undermine the complete block and initiate the caving process.

A separate undercut level was included for the following reasons:

- To ensure complete undercutting (avoiding the creation of small pillars which would be subjected to excessive stress levels)
- To improve the strength of the extraction level rockmass
- Maintain flexibility in the undercut sequence.

Undercut access tunnels are developed at 60 metre intervals parallel to the production tunnels below. Crosscuts are developed at right angles off the access tunnels at 15 metre intervals (See Appendix C). The undercut face is advanced in a flat V-shape (120º) so as to minimize abutment stresses on the extraction level where some development has already taken place (pre-undercutting).

Figure 3 depicts a 3-D model of the mining method geometry.

Original trough opening methodology

Trough opening is the term used to describe the establishment of an excavation where the caved ore can report into and be drawn from. The trough opening process takes place from the extraction level.

Refer to Figure 4, firstly the 2 drawpoint tunnels and the trough tunnel are developed from the production tunnels (see phase 1). A trough pass is blind bored upward in each trough from the centre of the trough tunnel on the extraction level to the undercut level, with a raise length of between 12 and 20 metres (see phase 2). This trough pass acts as a free breaking-face during blasting. Blastholes are drilled to a certain design from the trough tunnel upward in groups of holes, called rings (see phase 2). The first set of rings are designed to; firstly to increase the dimensions of the trough pass (see phase 3) and secondly to create a slot (see phase 4) when blasted. The slot is a term given to an excavation which from a 4 m base (width of the tunnel) widens up to 15 m as it reaches the undercut level 12 m above. The remaining rings' functionality is to widen the slot to the required width of the trough (see phase 5).

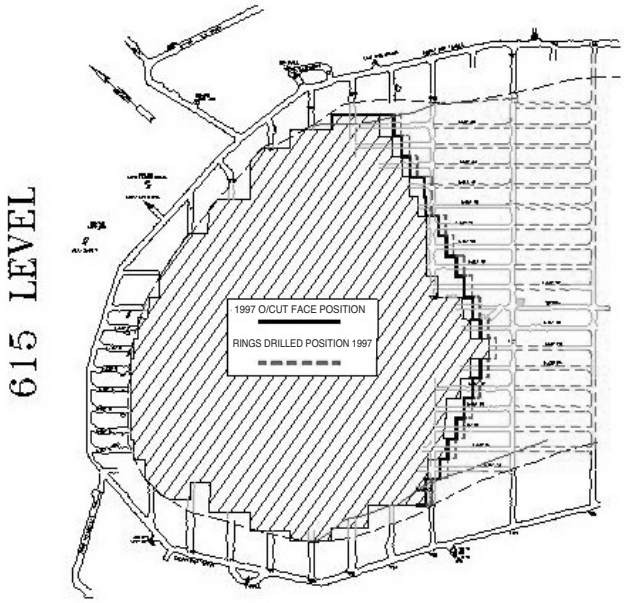

Appendix C

The trough pass used to be 660 mm in diameter. The blast holes were 64 mm diameter holes and were designed, with a maximum of 1.5 m toe burdens and 2.0 m toe spacing. The blast holes are designed to achieve holing into the overlaying cave once blasted. Note that the design of the trough opening is symmetrical around a north-south axis through the trough pass, i.e. Ring 1 (R1) is drilled twice, on the eastern and western side respectively.

Before charging commences, all holes to be fired are measured for length and direction, to determine the firing sequence. The complete slot (raise and slot) is pre-charged for safety reasons, to eliminate persons from charging underneath a slot that is in the process of being opened. The blast-holes used to be charged up with ANFO, shock-tube down-lines, 60g boosters, and detonating cord (as a back up). The sequence of blasting the raise, slot and remaining trough rings is set out under the following headings.

Creating the slot

Raise blasting (increasing the size of the trough pass)

With reference to Figures 5 and 6 (Ring 1 design), 4 vertical parallel holes were drilled around the trough pass, the functionality of these holes were to increase the dimension of the trough pass to a raise 1 m × 1 m wide. These holes were drilled as part of the slot rings, see Figure 6 Ring 1 design—90-degree holes. The 4 vertical holes were blasted individually. The reason for this is:

- The restricted void into which the blasted rock can displace can adversely affect blasting (void = volume available before the blast to accommodate the swell of *in situ* rock when broken). The single hole blasting practice allows for the clearing of the raise before the next hole detonates
- Blasting of an individual hole allows evaluation of the effectiveness of the blast before blasting the next holes. This allows adaptation of the timing sequence to compensate in case problems arise (like damaged down-lines, lost holes, or holes not breaking as anticipated)
- The inter-hole delays of shock-tubes (in conjunction with the burn-front constraint) do not allow for sufficient time to clear the hole of blasted ground.

Pre-charging of drill holes often resulted in the down-lines of the other holes being damaged, therefore the use of detonating cord as a back up.

A single centralized ring blast per day is carried out at Premier. As a result four days were needed to fire the 4 holes around the trough pass. As a result of the down-line damage this duration often increased.

Slot blasting (after raise is blasted)

Two slot rings were drilled either side of the trough pass with a spacing of 1 m between the rings. These two rings (called Ring 1E and Ring 1W) are mirror images, around the trough pass. See Figure 5.

The slot would be fired utilizing two holes on either side of the raise at a time. The reason for this is the same as for the raise blasting (see above). Safety became more of an issue. As more holes are blasted the increase in unsupported span (even holing into the cave) exposed personnel to the risk of a fall of ground, when connecting up the blast. Six blasts were required to blast the slot.

A total of 10 blasts were required to complete the slot and raise. The 10 blasts usually took more than 10 days again due to down-line damage.

Remaining trough rings (Ring 2 to Ring 5 east and West)

A well-defined free breaking-face makes the blasting of these rings less problematic. The final dimensions of the trough (11 m long—see Figures 2 and 5) and the ring burdens dictate the number of rings in the trough. With the 1 m wide slot, 10 m remained to be blasted, 5 m on either side of the slot. At 1.5 m burdens, this meant that an additional 4 rings were required on either side. The first 2 rings had ring burdens of 1 m each (note sub-optimal) and the remaining 2 had 1.5 m burdens. See Figure 5.

When firing with shock-tube the burn-front constraint is 20 holes (20 detonators have been initiated but have not fired before the first hole detonates). Therefore to eliminate the risks of misfired holes and creating bullrings (blasting does not break the rock as planned), no more than two

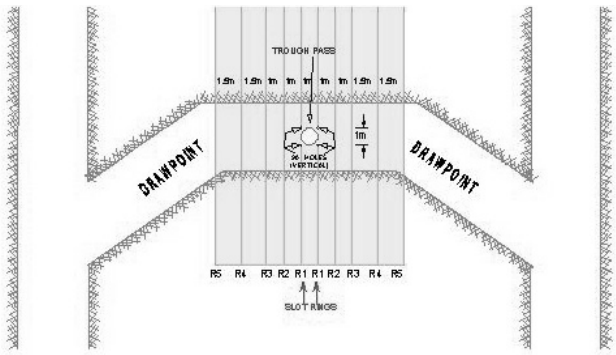

Figure 5—Trough ring positions with a 1 m wide slot, and 4 rings on either side of the slot. A total of 10 rings to be drilled (including slot rings)

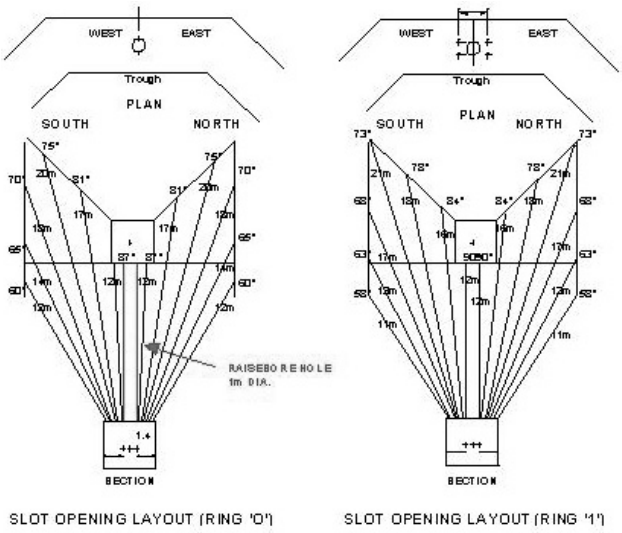

Figure 6—Section and plan view of slot ring designs (Ring 0 and Ring 1 respectively)

consecutive rings were fired at a time. (Charging capabilities are also limited to two rings per day.) Four blasts over four days were required to complete the remaining trough rings.

Successive charging and blasting cycles for the remaining trough rings, expose not only the blaster, but also the charging crews, to falling rocks from the slot itself and from the caved ore above. It should be noted that the time spent in the trough is independent of the number of rings charged and blasted at a time. However, the most dangerous period is when the first ring is charged and people are working within 2 metres of the open slot. As more rings are charged and blasted at a time, personnel are on average further removed from the dangerous brow area, minimizing the risk of a fall-of-ground injury

The total number of rings to be blasted per trough is 10 rings (2 rings for the slot and 8 to widen the slot to the required width of the trough). See Figure 5 for a plan view of ring spacings in the trough.

Theoretically the trough can be opened with 14 blasts spread over 14 days. In practice this is never realized, due to operational difficulties such as down-line damage and misfires. Trough and undercut drilling and charging share resources and increase the overall duration of trough drilling and blasting. The actual duration for the blasting of the trough opening process was in the region of 18 to 21 working days (21 working days = 1 month). This duration was unacceptable to mine management, and a project was launched to reduce the time taken to open troughs.

Trough opening project

The trough opening methodology and duration was unacceptable to mine management. The duration had to be reduced by optimizing drilling, charging and blasting activities. This was to be done without compromising on safety.

Critical analysis of the original trough opening practice

The following issues were identified which would improve the trough opening process:

- The four blasts taken to blast the four vertical holes was seen as excessive
- The 10 blasts required to blast the slot was identified as an activity that could be reduced
- If more rings could be blasted to widen the trough to its full dimensions, it would improve not only safety but also reduce the trough opening duration
- There were four rings (Ring 2 and 3 east and west) that had sub-optimal burdens of 1 m instead of 1.5 m. If burdens were optimized this would not only reduce the trough opening duration, but also drilling and charging operations would be optimized. This would result in a further cost benefit.

Changes to improve trough opening

Taking cognisance of the 4 issues identified above the following changes were made to re-engineer the trough opening process.

Trough pass diameter

A 660 mm-diameter trough pass used to be blind bored. A risk assessment of blasting the four vertical holes around the raise in a single blast indicated that the risk of freezing the trough pass was increased. It was therefore recommended that a 1 m-diameter trough pass be blind bored. However, the increase in the diameter of the trough pass would require a re-design of the slot rings to accommodate the larger hole.

It was decided not to change the principle of clearing the blasted ground from the raise before the next hole is detonated. To achieve the clearing of the ground from the raise, therefore, long inter-hole delays would be required (to be discussed later).

Slot rings

By increasing the spacing between the slot rings the larger trough pass could be accommodated. Further the holes in the 1 m wide slot were found to over-break and damage other holes. An increased spacing would reduce the chance of damage to blast holes due to overbreak.

The recommended design of the slot rings was as follows (see Figure 6):

- A 2 m wide slot is drilled with 3 rings spaced 1 m apart
- Both Ring 1s remained the same, except that they are drilled 2 m apart
- Between the Ring 1s a Ring 0 is added. The holes for the Ring 0 are staggered from the holes of the Ring 1s. This creates a dice-5 pattern. This dice-5 pattern maximizes the breaking angle between holes in the slot rings, optimizes the explosive charge distribution and increases the distance from the closest hole to reduce overbreak damage. The distance was increased from 1 m to 1.4 m. See Figure 6, compare Ring 0 and Ring 1 designs, note Ring 0 hole angles bi-sect Ring 1 hole angles, in the sectional view.

Again it was decided not to change the principle of clearing blasted ground from the raise. This principle allows a portion of ground to report into the trough tunnel below to maximize the usage of available void. Long delays are required to allow the ground to gravitate into the trough tunnel. Furthermore accuracy and reliability is required to ensure not only detonation but also the correct sequence of hole detonation. The possibility of down-line damage in firing rings in multiple blasts requires the detonator to be testable to ensure down-line damage has not occurred.

Remaining trough rings

With the introduction of a 2 m wide slot the placement of the remaining trough rings had to be re-designed. This allowed for the optimization of the remaining trough ring burdens, by eliminating the sub-optimal burdens associated with a 1 m wide slot (referred previously)

Although the 2 m wide slot required an additional ring (Ring 0) an optimization of ring burdens resulted in the reduction of one ring per trough. With reference to Figure 7, the reduction of a ring stems from the remaining 9 m (for the required 11 m width of the trough) after a 2 m slot was taken, 4.5 m on either side of the slot. This resulted in 3 rings (R2 to R4 east and west) on either side of the slot at 1.5 m burdens, all at optimal burdens. A total of 9 rings (3

slot rings and 6 trough rings) are required in the troughs instead of the previous 10 rings. See Figure 8 below sectional view of trough ring designs and Figure 4 for spacing of rings in the trough. This resulted in a saving of 315 m (from a total of 2430 m—13%) of drilling per trough. Financial benefits are shown in Table II below.

In addition to the reduced number of trough rings an initiation system was required that would initiate all 6 rings simultaneously and reliably. Not only should detonators be testable to ensure detonation but also all detonators should be activated before the first hole detonates (eliminate the burn-front). Increasing the number of rings blasted at one time, reduces the number of times the crew is exposed to the opened slot. The risk of a fall-of-ground injury is thus commensurately reduced.

Initiation system

The initiation system requirements to accomplish the above-mentioned requirements for timing would be to have long delay periods together with accuracy, flexibility in delays, reliability and testability. This could only be provided by a programmable, electronic delay system. A limited number of systems are available which offer these requirements. A joint development project was initiated with an explosive supplier.

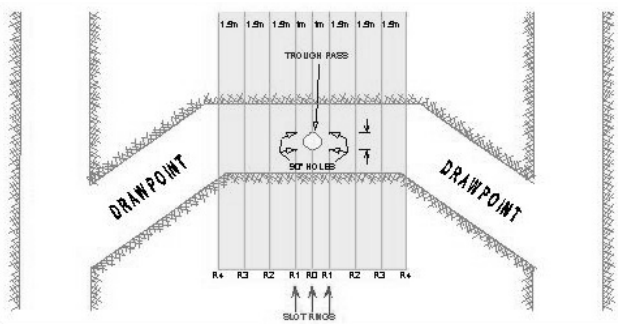

Figure 7—Trough ring positions with a 2 m wide slot, and 3 rings on either side of the slot. A total of 9 rings to be drilled (including slot rings)

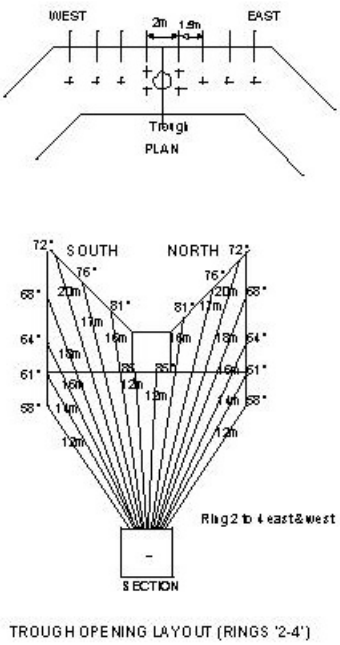

Figure 8—Section view of trough ring designs (Rings 2 – 4 east and west)

EDD implementation at Premier Mine

Selected initiation system

The selected system has the following features. Each detonator has a unique identity number (ID). The detonator is made part of a blast by reading its ID and assigning a delay to a memory bank (called a *RowPod*) by means of a *Logger*. The detonators are tested by electronic communication. Once they are found to be in order, the detonators are programmed with their delays, armed, their capacitors charged and then initiated with a different piece of equipment called a *Blaster*.

The system complies with the principle of 'Inherent Safety'. This means the *Logger* used at the face is unable to fire detonators even if the *Logger* develops faults. This is ensured by the *Logger* being unable to produce more than 9 volts from the internal battery. The proven and test-blasted No-Fire voltage of every detonator is above 11.5 volts. In addition to the high voltage the detonators require complex digital signals to arm and fire. The chances of stray signalling mimicking the firing codes has been calculated by the supplier at 1 in 16 trillion.

The detonators have been tested to 600 volts AC, 30 000 volts static discharge and 50 volts DC injection. Whilst the detonator may not function after some of these tests in no case did any fire during the tests.

Six operators were fully trained in the use of the system. Operators are evaluated using a competency based training program to ensure that all authorized users have the knowledge and proven ability to work with the system under all conditions.

Initial trials

Initial trials were required by the mine to confirm that the system was reliable and would perform to specification in the mining environment. The initial trials were performed using prototype hardware. The system was first tried in trough rings, where blasting is less problematic, compared to blasting a raise or a slot. After four successful blasts it was decided to start firing in the more difficult raise and slot areas.

Void ratio calculations

Void calculations are done to compare the void that is available before the blast to the volume of the *in situ* ground. This void ratio checks the availability of a volume to accommodate the swell of ground when blasted.

Table II

Financial benefits of re-engineering of the trough opening process

Drilling saving (per trough)	R13 500
Explosives saving (per trough)	R6 300
Minus increase in initiation cost (per trough)	R3 500
Total savings (per trough)	R16 300

Calculations of void ratios indicated the potential to open the entire slot in two blasts, which was felt to be conservative. First blasting around the trough pass, then taking the remainder of the slot. In conjunction with the void calculations, the time to clear the raise (see next sections Blasting into a 20 m blind raise) was important in determining the maximum blast duration allowed by the prototype blasting equipment. This two-phase blasting of the slot was first accomplished in March 1998. Further investigation showed the potential to blast the entire slot in a single blast, however, the prototype equipment did not allow it.

A plan view of the 4 x 90 degree (vertical) holes in a 2 m wide slot and a 1 m trough pass during the 4 blasting stages are shown in Figure 9.

Calculations of void ratios have been performed on each stage of firing the raise opening with the 1 m slot and a 660 mm trough pass. A minimum void ratio of 150 per cent of the theoretical void needed was set as a standard to allow for the high expansion ratio of kimberlite and any drilling deviation.

With the introduction of the 2 m wide slot and the 1 m trough pass the 150 per cent minimum void ratio criteria for the raise was maintained. Table III below shows the void ratio for each of the 4 vertical holes for blasting the raise (20 m length).

Experience showed that the 150 per cent void ratio was conservative. This has now been reduced to between 75 and 85 per cent of the required theoretical void ratio.

The void ratio calculations for the remaining 6 trough rings showed that this could be done in a single blast. However, it was decided to commence with a two-blast strategy.

Development of timing

Three distinct timing regimes have been identified for trough opening. These apply to the different stages (similar to the 25/500 shock-tube system) of opening and are controlled by void ratio and ground movement requirements (clearing of the raise).

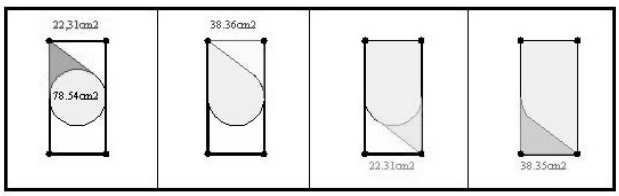

Figure 9—Plan view of a 1 m raisebore hole and vertical holes in a 2 m wide slot configuration. Grey hatched area depicts a cross-section of the available void that the hole has to break into

Table III

Void calculations for each hole of the vertical raise sliping holes

Hole Number	Delay millisecs	*In Situ* Volume m³	Available void M³	Void Ratio %
1	0	4.46	15.71	350%
2	2,000	7.67	20.17	263%
3	4,000	4.46	27.84	624%
4	6,000	7.67	32.31	421%

Blasting into a 20 metre blind raise

This is the most critical step as failure to gain the requisite height cannot be rectified by subsequent blasts. In order to successfully widen a trough pass, timing must allow for adequate clearing of the raise. There must be sufficient time between blasts to allow for previously blasted material to be removed to prevent compaction and freezing.

The exact mechanism for clearing blasted ground from a 20 m blind raise is unknown. It is thought that both detonation gasses and gravity play significant roles. Although void calculations show adequate void for each of the four sliping holes (see Table II: Void calculations for each vertical sliping hole), it is believed that the raise chokes as a result of blasted ore accumulating at the bottom of the raise. If the accumulated rock has not been cleared from the raise bore hole before the next blast hole fires, the choked ground is compacted and freezes in the hole. This has been proven on several occasions with kimberlite freezing in the bottom 5 metres of the raise.

The role played by detonation gasses is difficult to quantify. The extent to which detonation gasses affect the blast will be influenced by the point of initiation and subsequent direction of detonation in the hole. Differing pressure levels within the raise may also affect the direction of movement of the blasted rock. There has been discussion on the effect of time between primers in a single hole amongst proponents of the collar first, toe first and all-together theories (see Figure 10). This effect has not been quantified.

It is, however, a simple matter to quantify the effect of gravity. Physics tell us that a mass, initially at rest, will fall a distance (D) of:

$$D = {}^1/_2 \times G \times T^2$$

where G is accelaration due to gravity (9.81 m/s²)

and T is time in seconds.

For a 20 metre raise this indicates that under gravity alone the void will be cleared in 2 seconds. This has been

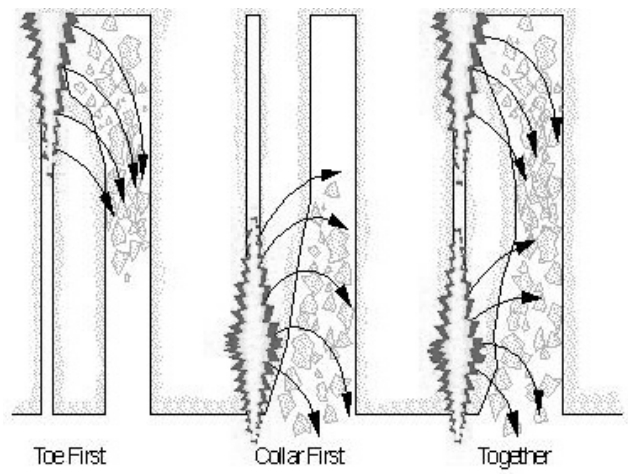

Figure 10—Section view showing priming options for blasting the raise

borne out at Premier where firing the holes around the raise at an interhole delay of 2 seconds was successful. However, where times were reduced due to the timing constraints (limit of six seconds) of the earlier, prototype system, choking and freezing occurred. It is therefore felt that gravity and thus the inter-hole delay has a much greater effect, than detonation gasses on the clearing of the raise.

For blasting a raise, an interhole delay of two seconds has now been standardized at Premier Mine.

Modified and customized control hardware was handed over to the mine in June 1998. The customized controllers allowed a longer blast duration for the possibility to fire a slot in a single blast.

Firing slots

Blasting a slot into a raise presents less of a challenge than blasting the raise. A cleanly broken slot enables the trough to be completed effectively and in a short time. The two essential requirements for timing the slot are sequencing and inter-hole delay.

Sequencing is developed through measuring hole collar angles and then overlaying the sequence as shown in Figure 11 steps 1 and 2 below.

The timing philosophy between sequential holes (holes with distinct difference in angle) are 1000 milliseconds between the initial holes, then 500 then 100. A delay of 20 milliseconds within a pair (holes with small differences in angle) is added; with the hole closest to the void firing first. This delay sequence has been shown to be the most effective in maintaining slot height. See Figure 11; step 3.

Void ratios for slots were calculated and included ground movement into the underlying drawpoint tunnel. Effective breakage was observed with void ratios as low as 35%.

Phasing in of 1.0 metre raises along with the three ring—2 metre wide slot, including the new system hardware changes, has enabled slots to be opened in a single blast. Blast timing for single firing slots combines the six seconds for the raise with the four seconds for the slot giving a blast duration of around ten seconds.

Blasting the remaining trough rings

Delays of 10 milliseconds between holes and 60 milliseconds between rings produced excellent results. One of the benefits of fast firing is reduced hole dislocation from *in situ* ground movement. Single priming has been effective here. Fast firing also appears to have a positive influence on breaking upwards into the cave resulting in reduced hang-ups after the trough is opened. Increasing the number of rings in a single blast has similarly been of benefit. As many as eight rings, (compared to a maximum of 4—2 on either side of the slot—previously allowed with shock-tube) with a void ratio of 30%, have been blasted successfully, with no indication of choking.

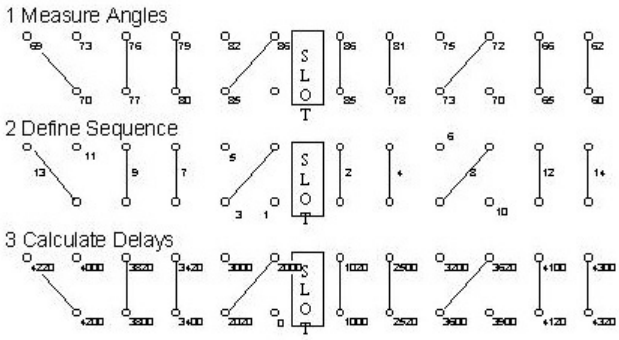

Figure 11—Plan view of remaining slot holes around 2 m x 1 m slot. (Note only 2 x Ring 1's are shown for simplicity of the illustration)

Recovering from problems with a flexible (programmable) blasting system

One of the advantages of a fully programmable blasting system is the ability to change timing after the hole has been loaded with explosive. This enables the user to modify standard timing to compensate for sub-optimal breakage in a previous blast.

In order to optimize the timing sequence of rings blasting into slots, it is necessary to measure the broken slot profile. At Premier this is done quickly and simply, by using a digital inclinometer attached to a laser distomat. Placing the distomat in the slot a reading is taken every 10 degrees, enabling a plot such as that shown in Figures 12 and 13 to

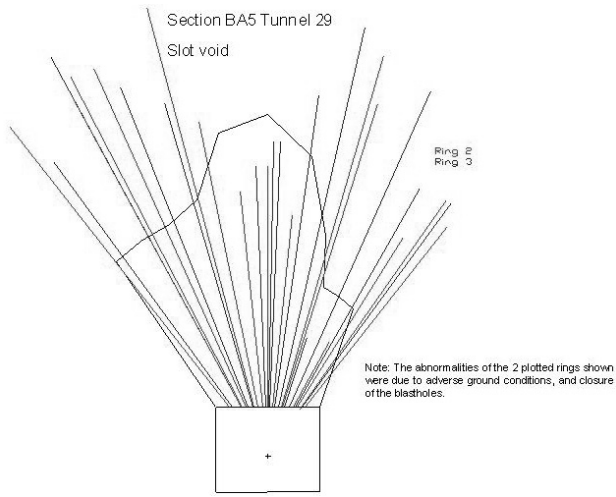

Figure 12—Slot (void) section view with next 2 rings (actual angles and lengths) overlain

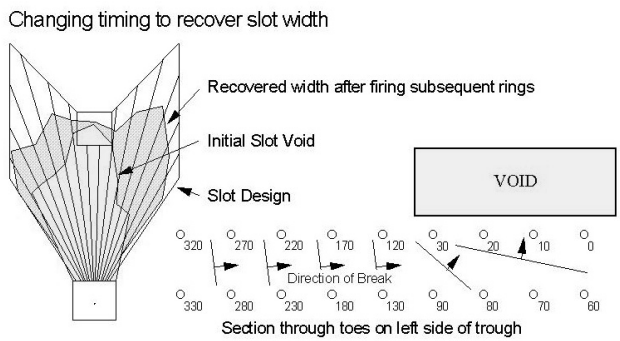

Figure 13—Section view of designed slot, initial slot and recovered width. Also showing plan view of void with subsequent 1/2 rings and associated timing

be developed. Overlaying the measured subsequent rings on the broken void, allows informed decisions regarding timing to be taken. See Figure 12.

In the following example (see Figure 13) two rings were blasted into a slot which, due to ground conditions and closure of holes, had failed to break to the required profile. The timing of the subsequent rings was altered to fire them as a second slot, breaking sideways, rather than as conventional rings blasting into a full void. This technique has proven effective in a number of situations.

Blast results and measurements

Slot profiles

No measurements are available on the profile of slots previously blasted with shock-tube. Visual observations by the mining personnel are the only available assessment. Benchmarking the results of the new method of slotting with EDDs against previous results is therefore difficult. Slot drill patterns were always designed to hole into the cave and the adjacent blasted drawpoint as the slot was blasted. In practice holing rarely, if ever, occurred. Typically holing only occurred as the last rings in the trough were blasted. There have been occasions when all the trough rings would be blasted without the trough holing into the overlying cave. Blasting in the adjacent trough increased the unsupported span of rock and this, together with the concussion and displacement that accompanies blasting, was required to collapse the crown pillar of the original trough. Troughs could hang-up for several weeks.

When blasting with EDDs the results showed that holing occurred regularly. Five out of 6 drawpoints blasted with EDDs holed into the adjacent, previously blasted drawpoint, as the slot was blasted. These results and ready acceptance of the system by mining personnel attested to the improvement in blasting practice. However, once holing into the cave occurs, the subsequent blast would bring caved ore down into the drawpoint. The drawpoint would then have to be loaded until a hangup occurred to allow further blasting of the trough. Often ineffective choke blasting had to be carried out. To eliminate this all the rings had to be blasted once holing occurred. All the troughs blasted with EDDs caved following the ring blast after the trough had holed into the cave. Often caving would occur before the trough had been blasted to its final dimension.

Positive results with EDDs are a consequence of being able to test the system prior to blasting to ensure initiation in firing rings in multiple blasts as well as the increased flexibility in hole timing.

Trough opening duration

Theoretically it should take 14 blasts to complete a trough with the 25/500 shock-tube system. Between 18 and 21 days were usually required.

Table IV below indicates some of the results with the EDD system.

Note: The duration is from the first day of blasting to the last day of blasting. Some durations were affected as no charging takes place on a Friday (D/P 15, 31 and 33). Moreover undercut blasting influenced charging operations in the troughs as did other operational difficulties (D/P 13 and 35).

Safety

The inherent safety features of the EDDs are obviously one of its major benefits. This is augmented by the decreased number of blasts due to improved blast performance and reliability compared to the 25/500 shock-tube system.

A further benefit is the decrease in exposure of the charging and blasting crew to an open slot. The blaster has to return to connect up a blast with the 25/500 shock-tube system (per trough) between 16 and 21 times. More than half the time he is working within 2 metres of the slot brow, an area exposing him to the risk of falling rocks. Using the EDD system the miner connects up his blast a maximum of 4 times. Only once is he exposed to the sliped raise and twice to the open slot.

The EDD system allows more rings to be blasted at the same time. This allows the crew to do most of their charging further away from the potentially risky slot brow. The drill and blast crews appreciated both the enhanced blasting performance and increased safety of the EDD system.

Management's requirement that safety should not be compromised by any new blasting system was met; it actually created safer working conditions.

Recent developments at Premier

The justification for the purchase of two new long hole drill rigs to replace equipment that was more than 10 years old was based largely on the ability of the equipment to drill accurate 76 millimetre diameter blast holes. The ability to drill a hole of increased diameter has allowed drill hole burdens and spacings to be increased. This will allow further optimization of drilling and blasting operations. The width of

Table IV

Summary of EDD blast results

Trough	Pass diam	Raise	Slot	Trough rings	Total duration
D/P 15	660 mm	1 blast	1 blast	2 blasts	6 days
D/P 13	1 m	1 blast (trough pass weeping, no zero ring)		2 blasts	7 days
D/P 29	660 mm	1 blast	1 blast	1 blast	5 days
D/P 31	1 m	1 blast	1 blast	1 blast	7 days
D/P 33	1m	1 blast	1 blast	1 blast	6 days
D/P 35	1m	1 blast (area taking pressure)		2 blasts	8 days (waiting for hang-up to occur)
	Average	1 blast	1 blast	1.5 blasts	6.5 days

the slot can be increased from 2 to 3 metres and ring burdens increased from 1.5 to 2 metres. This will reduce the amount of drilling required. Hole deviation should be reduced.

Three troughs have recently been opened with EDDs using a 3 m wide slot, proving that trough opening can be further optimized through using improved technology and experience.

Conclusions

The introduction of electronic delay detonators in the trough opening process at Premier mine has resulted in significant benefits. These include:

- Reduced number of blasts per trough leading to increased productivity. This has allowed Premier to greatly improve the efficiency of trough opening which is critical for production
- Reduced the trough opening duration from 18 days to 7 days
- The implementation of EDDs reduced the risk of firing a 2 m slot. This has been accompanied by a direct saving of R16 300 per trough
- The new longhole drill rigs, are capable of drilling a larger hole diameter and will allow further optimization of drilling and blasting operations
- Improved overall safety of the underground operation not only because of the inherent safety of the EDD system but, more importantly, by reducing the exposure of the drilling and charging crews to unstable brow areas and open slots.

Having less variability and higher reliability gives you more control and confidence.

Acknowledgements

The author would like to acknowledge the permission of the Director—Operations, Consulting Engineer and Consulting Mining Engineer of De Beers Consolidated Mines Limited and the management of Premier Mine to publish and present this paper. In addition the author would like to thank the mining personnel involved in the project, as well as Expert Explosives for their assistance. Finally, thanks to Peter Duniam for his technical and practical assistance in the project as well as in the compilation of this paper. ◆