Stress induced damage in tunnels in a cave mining environment in kimberlite

by P.J. Bartlett* and K. Nesbitt*

Synopsis

Premier Diamond Mine exploits a kimberlite orebody using cave mining methods. A drilling level is established at the base of a block of ore to effect undercutting that leads to caving of the overlying ore. A second level is developed some 15 metres below the undercutting level to allow extraction of the ore once it has caved. As much as 45 per cent of the rock is removed on the extraction level creating a series of pillars.

Undercutting creates abutment stresses, as high as 3 times the virgin stress, which affect the rock mass to a distance of 20 metres from the undercut face on the undercut level and on the extraction level 15 metres below. If the extraction level is completely developed prior to undercutting, where stress levels exceed 20 per cent of the rock mass strength, extensive rock mass and support damage occurs as the undercut passes overhead. Rock mass damage takes the form of movement along existing joints and minor shear failure through intact rock. Support damage takes the form of cracking in rigid concrete linings. Where induced stresses exceed 50 per cent of the rock mass strength it is often impractical to keep excavations on the extraction level open. Rock mass damage takes the form of extensive failure of the rock in shear which evidences itself as propagation of the fracture zone around tunnels and footwall heave. Support damage results in destruction of shotcrete linings and concrete footwalls. As the interbolt support fails, badly fractured rock ravels around the steel tendons.

Observation and monitoring at Premier Mine and on other cave mines has shown that induced stress levels and consequent damage are a function of:

- the extraction ratio on the undercut and extraction level prior to undercutting
- the shape of the undercut face
- the rate of undercut advance
- the distance of leads and lags between adjacent tunnels on the undercut level.

To ensure the stability of excavations, all of the above parameters must be carefully planned and the planned mining sequence rigidly enforced. The minimum of development is completed on the extraction level prior to the undercut passing overhead. Required development is then rapidly completed once the area has been de-stressed. Support is installed in three phases:

- Rockbolts are installed as soon as excavations are developed
- Wire mesh, steel tendon straps and a layer of shotcrete sufficient to protect the mesh and straps from damage by blasting and LHD loading is installed as soon as practical thereafter. Inevitably the shotcrete lining has to be replaced once the undercut has passed overhead..
- Rigid shotcrete linings and concreted footwalls are completed only after the undercut has passed overhead and the area has been de-stressed.

Introduction

In any cave mining method a horizontal slice of rock is mined out at the base of the block to be caved by drilling and blasting. Once a sufficiently large area has been mined continuous caving initiates and propagates through the block. High stress levels are set up in the abutment zone around the perimeter of the caving area that can affect tunnel stability to a distance of 20 metres from the cave front. A second level must be created below the caved rock to allow mining of the overlying, caved ore. The mining sequence implemented impacts on the levels of stress to which the tunnels on the lower level are subjected. Ideally all development on the upper, undercut level should be completed and development on the lower, extraction level should be carried out in de-stressed rock. Logistical constraints often preclude this mining sequence. Alternate strategies and controls must be implemented to limit stress induced damage to the extraction level.

Mining sequence

In any cave mining system using LHDs for ore extraction the block to be caved must be undercut to induce caving and access must be for provided for LHDs to load ore from the base of the cave and transport the ore to passes or crushers. Figure 1 is a diagram illustrating the caving process. Figure 2 shows the complexity of the cave layout and the relationship of the undercut level to the extraction level and troughs as implemented at Premier Mine. Figure 3 provides more detail of the extraction level and trough layout. All of the excavations are essential for successful cave mining. Drilling tunnels are developed at 15 metre centres on the undercut drilling level

* *De Beers Consolidated Mines, Cullinan*

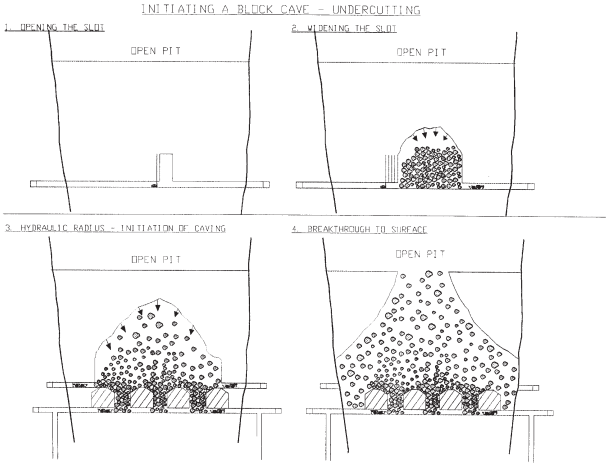

Figure 1—Diagram of block cave progression

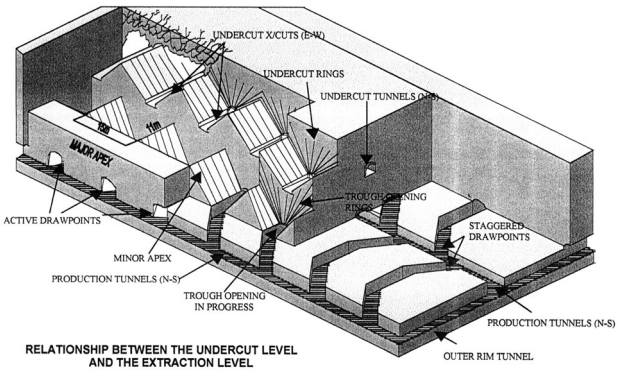

Figure 2—Isometric view of cave layout

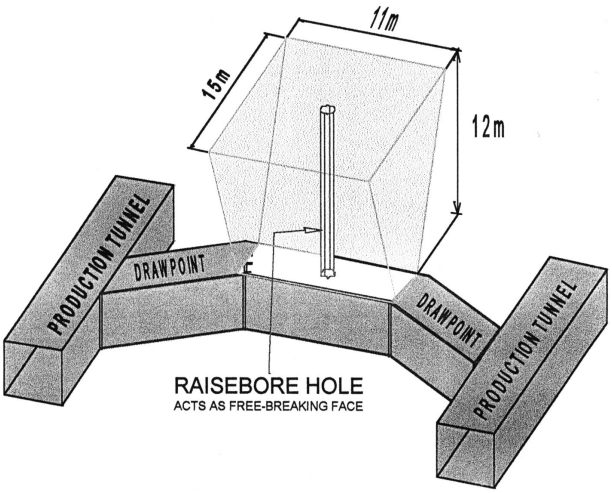

Figure 3—Isometric view of trough and extraction level

for an extraction ratio of 13 per cent. Excavations remove a minimum of 45 per cent of the rock on the extraction level depending on tunnel size and the accuracy of tunnel development. Once the troughs have been developed at least 50 per cent of the rock between the hanging wall on the undercut level and the footwall on the extraction level 15 metres below is removed. A complex series of pillars is created at the base of the cave.

The excavations can be developed in at least 3 different sequences. The sequence determines the extraction ratio on the production level prior to the level being subjected to induced, undercut abutment stresses. This in turn determines the degree of excavation and support damage that will be incurred in tunnels on the extraction level. Two mining sequences have been implemented at Premier Mine. The third mining sequence is under consideration. The mining sequences are termed *post-undercutting, advance undercutting* and *pre-undercutting*.

Post-undercutting

In the post-undercut mining sequence all development on both the extraction and undercut level as well as the troughs are completed before undercut drilling starts. Major advantages are that all development and support can be completed before production starts and the undercut level does not have to be developed and equipped as a production level. Blasted and caved ore is removed from the base of the cave quickly and cannot compact. A major disadvantage is the 45 per cent extraction ratio created on the production level. Tunnels are subjected to high and variable stresses in terms of both magnitude and direction. This can result in extensive rock and support damage depending on rock strength, mining depth and support effectiveness. Numerous drilling, support and rock damage problems were experienced with the post-undercut mining sequence implemented at Premier Mine. This prompted the change to an advance undercut mining sequence.

Advance undercutting

In the advance undercut mining sequence the objective is to achieve as low an extraction ratio on the production level as possible prior to excavations being subjected to high undercut abutment stresses. The amount of development is determined by rock mass strength, expected stress levels and the constraint that all development, including troughs, must be completed and supported expeditiously after undercutting so that ore can be mined before compaction occurs and stresses are re-established. The major advantage is that rock and support damage is constrained to acceptable levels as a result of a low extraction ratio on the production level. Major disadvantages are that the undercut level must be developed as a production level. Support is carried out in three phases. Development, trough opening and support must be carried out quickly to avoid compaction. Logistics are complicated. Advance undercutting has been successfully implemented at Premier Mine.

Pre-undercutting

In a pre-undercut mining sequence undercutting is completed before any development is carried out on the production level. The major advantage of this mining sequence is that production level development is carried out in de-stressed rock. Rock and support damage is minimized and support is completed in a single phase. The major disadvantage is that development, trough opening and support must be carried out very quickly once undercutting has been completed. Experience has taught that compaction can occur within 6

months at a mining depth of 630 metres below surface and within 3 months at a mining depth of 730 metres below surface. Development, trough opening and support must be carefully planned and highly mechanized to ensure that production commences before re-compaction. Premier Mine is developing the needed equipment, technology and skills to implement pre-undercutting in both current and future mining blocks.

Undercutting

Experience on Premier and other cave mines has shown that three parameters have the ability to influence the effectiveness of undercutting and the degree of damage to which excavations on both the undercut and production levels will be subjected. These parameters are:

- the overall shape of the undercut face
- the rate at which the undercut face is advanced
- the leads and lags between adjacent tunnels.

A subordinate consideration is the actual drill and blast pattern used to undercut the block.

The overall shape of the undercut face

The most stable face shape is concave or V-shaped toward the cave. Figure 4 illustrates the face shape developed in the BA5. This face shape has the advantage that low abutment stresses develop at the apex of the V on both the undercut and extraction levels and drilling and blasting operations are comparatively easy to effect here. High abutment stresses develop towards the edge of the cave. A straight face shape is often more difficult to control than the V-shape and does not provide the low stress area that the V-shape does.

The rate at which the undercut face is advanced

The abutment stresses associated with the advancing under cut can induce fractures parallel to the cave at a distance of up to 20 metres ahead of the undercut. If undercut tunnels are advanced more slowly than the natural rate of fracture propagation the fractures destroy support and make drilling and blasting operations problematic. The rate of fracture propagation is a function of the rock mass rating, face shape and mining depth. At Premier Mine, at a mining depth of 730 metres, tunnels were advanced at a rate of at least 3 metres per tunnel per month for an overall rate of advance of 700 square metres per month. Fracture propagation overtook the rate of undercut advance leading to extensive tunnel collapse. Problems were compounded by the ingress of water into the area. It became impossible to advance the undercut face for several months and a production tunnel and several drawpoints on the extraction level 15 metres below were crushed. Additional development was needed to accomplish undercutting. The crushed extraction tunnel had to be expensively re-supported with yielding steel arches. Production from the tunnel was delayed by several months. The overall cost of the problem ran into several million rand. The planned rate of undercutting has been increased to 1100 square metres per month on the 730 metre level.

Leads and lags between adjacent undercut tunnels

Ideally the undercut should be advanced as a straight face. In practice tunnels are advanced in steps by drilling and blasting rings spaced at between 1,5 and 2 metres. It is possible to create a tunnel face that is many metres in advance of the undercut face in the adjacent tunnel. The greater the lead between adjacent tunnels the more the area between the tunnels behaves as an isolated, stressed pillar and the more difficult it becomes to drill and blast in the highly stressed area. Practical experience at Premier Mine has shown that leads and lags between adjacent tunnels should not exceed 7 metres. If the distance is greater, enhanced stress levels can impact on drilling and blasting efficiencies and slow the overall rate of undercut advance.

Undercut drill and blast ring design

Experience has taught that overall undercut face shape, rate of undercut advance and lead and lags between adjacent tunnels are all equally important parameters that must be carefully controlled for effective cave mining. The effectiveness of undercut ring drilling and blasting is, therefore, an operation that demands careful design and implementation. Holes must be accurately drilled and successfully blasted. At Premier, as on many other cave mines, undercut ring design was initially complicated with holes in excess of 20 metres drilled and total drilling per ring of several hundred metres. This provided early production tonnage from the cave but slowed the rate of undercutting. As stress levels increased it became increasingly difficult to accurately drill and then charge undercut drill holes. Misfires and poor breakouts were common. The undercut face could not be advanced at the required rate. Drilling has now been minimized both in terms of the number and length of holes drilled and blasted. The drilling pattern used at Premier Mine is illustrated in Figure 5. The drill pattern creates two free-breaking faces and allows blasted rock to flow towards the undercut tunnel under the influence of gravity where it is loaded by LHDs. Several cave mines have further reduced drilling and blasting operations by successfully implementing a flat undercut. Only the rock between tunnels is drilled and blasted. In this situation ore cannot move under the influence

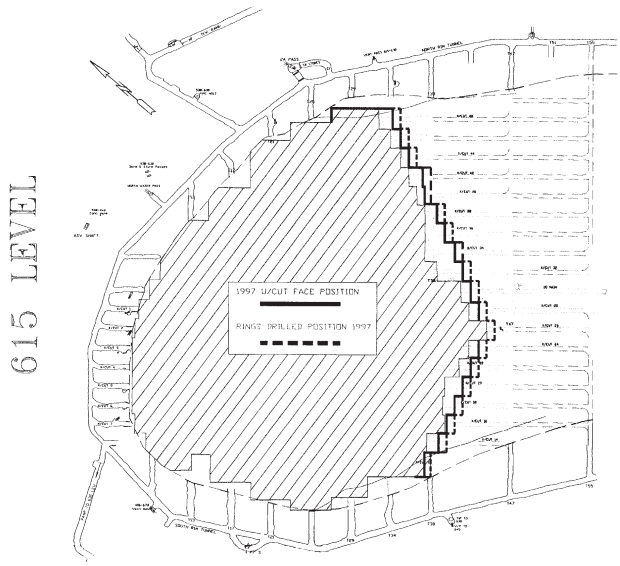

Figure 4—Plan of undercut level

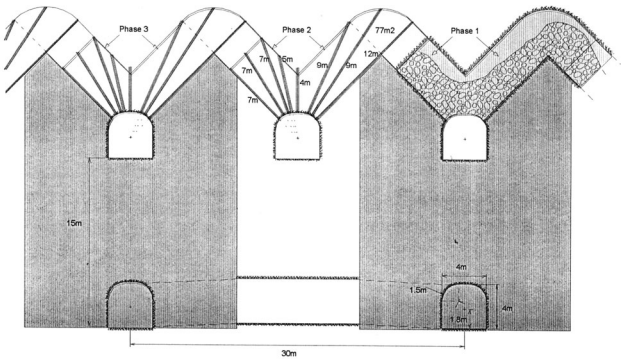

Figure 5—Section showing undercut ring design

of gravity and blasted rock between tunnels must be moved by LHDs or troughs on the level below must follow very close behind the undercut face.

Tunnel support

Tunnel development is generally carried out in good rock conditions. Resin grouted 1,8 metre long rockbolts are installed on a 1 metre square spacing within 5 metres of the advancing tunnel face. The fracture zone associated with tunnel development is usually less than 0,5 metres and at least 1,0 metre of the 1,8 metre long rock bolts are resin grouted into solid rock. Problems only arise once tunnel development starts to be affected by undercut abutment stresses.

Support on the undercut level

Tunnels on the undercut level are between 12 and 15 metres apart and are seldom needed for more than two years by which time they have been destroyed by drilling and blasting associated with the advancing undercut. Tunnel support on the undercut level is kept to the minimum commensurate with the safety of men and equipment. Tunnels can be affected by abutment stresses up to 20 metres from the undercut face and support must be installed that will ensure the safety of men and equipment as the area becomes subjected to these stresses. In addition to rockbolts, tunnels are supported with chainlink wiremesh and steel tendon straps. Shotcrete is applied to a height of 2 metres on the sidewall to prevent LHD damage to the mesh and tendon straps. Intersections of tunnels are supported with longer roof bolts and corners are strapped with steel cable trusses, covered with shotcrete. This level of support is usually adequate unless the area is affected by water and/or high stresses that can arise because of a slow-moving undercut, extended leads and lags between adjacent tunnels and an incorrect undercut face shape.

Support on the extraction level

Extensive monitoring around excavations on the extraction level using vibrating wire stress meters and magnetic extensometers has shown a consistent pattern of rock and support damage associated with a post-undercut mining sequence. Figure 6 illustrates the monitoring that is done around a tunnel. Representative monitoring results are shown in Figure 7.

As the undercut face approaches a position directly above the monitoring station stress levels increase abruptly.

- If the stress increase exceeds 5 per cent of the uniaxial compressive strength of the rock shear movement on existing joints and fractures occurs. If the area has been supported with good interbolt support such as shotcrete reinforced with mesh and tendon straps this movement is effectively constrained.
- If the stress change exceeds 20 per cent of the uniaxial strength of the rock this is usually enough to cause the propagation of the fracture zone around the tunnel by failure in shear of the rock. This results in tunnel convergence. High thrusts are set up in the continuous, rigid shotcrete or concrete linings leading to limited failure of the lining. Overall, the rockbolts and re-inforced lining provide sufficient constraint to keep displacements within stable limits of less than 50 millimetres.
- If the stress change exceeds 50 per cent of the uniaxial compressive strength of the rock this is generally sufficient to induce extensive failure in shear of the rock around the excavation. The failure zone propagates beyond the depth of the grouted rockbolts. Large tunnel convergences in excess of 200 millimetres can occur which set up high, destructive thrusts in the rigid shotcrete lining, leading to destruction of the lining which is needed to constrain the rock between the rockbolts. The failed rock behind the lining ravels around the bolts and the tunnel crushes. Footwall heave in excess of 1 metre is often measured.

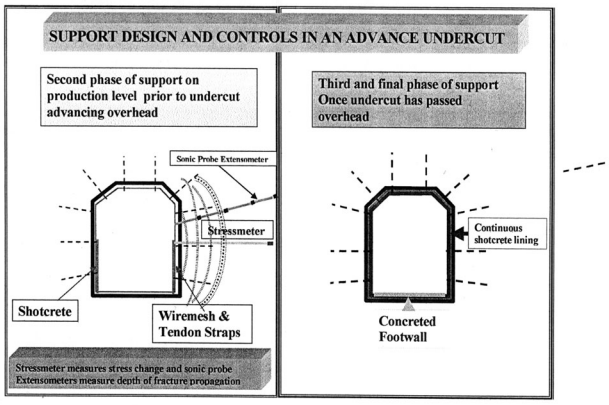

Figure 6—Support design in an advance undercut

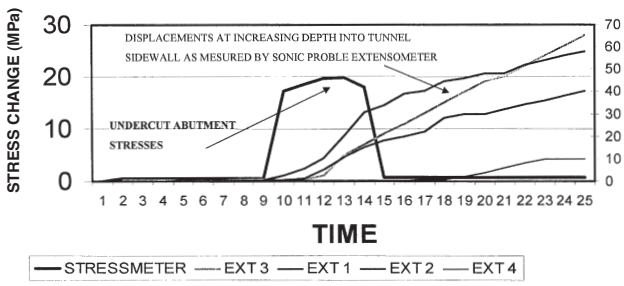

Figure 7—Stress changes and displacements around a tunnel

Figure 8 illustrates the magnitude and direction of the stress field that develops around the advancing undercut and pre-developed tunnels on the production level 15 metres below. Figure 9 illustrates in more detail the strains that develop around a 4,5 metre by 4,5 metre tunnel as the undercut advances overhead.

The pattern of support and tunnel damage monitored during a post-undercut mining sequence obliged the mine to change to an advance undercut mining sequence with careful geotechnical controls on the rate of undercut advance, lead and lags between adjacent tunnels and the overall face shape to ensure that stress changes were minimized.

In the advance undercut mining sequence the extraction ratio on the production level is less than 20 per cent before the undercut is advanced overhead. Chainlink wiremesh, tendon straps and shotcrete to a height of two metres is installed. The rigid shotcrete lining is not extended around the circumference of the tunnel as the high undercut stresses inevitably lead to tunnel convergence which, in turn, sets up high, destructive thrusts in the continuous shotcrete lining. All corners are strapped with tensioned cable trusses and covered with shotcrete prior to the undercut advancing overhead. As the undercut passes overhead stress changes are less than 20 per cent of the uniaxial compressive strength of the rock and damage is usually limited to minor shear failure at the corners of tunnels and at places in the shotcrete.

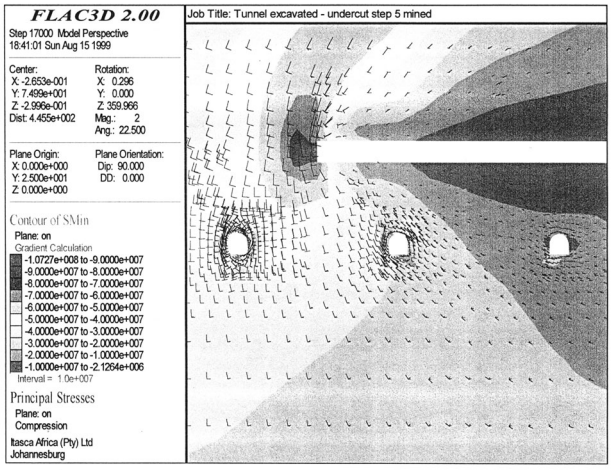

Figure 8—Stress levels around undercut and extraction levels

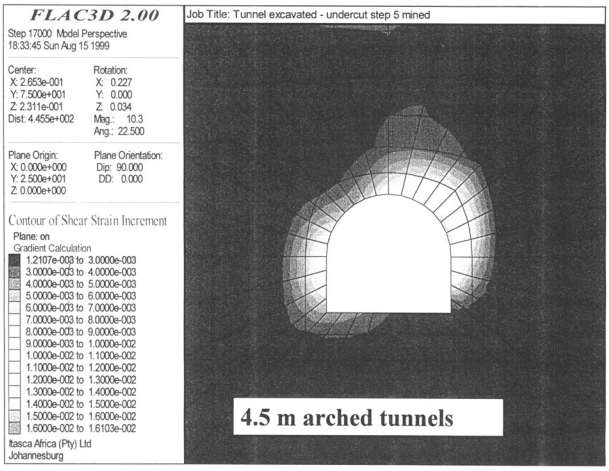

Figure 9—Section of stress levels around production tunnel

Once the undercut has passed overhead, tunnel and trough development is completed, the third and final stage of support is installed. This includes rehabilitation of any damaged areas and complete shotcreting of all tunnels. The footwalls in all the drawpoints and production tunnels are concreted. The support sequence is illustrated in Figure 6.

Conclusions

- High abutment stresses are an inevitable part of cave mining. At shallow mining depths and in competent rock the induced stresses are not sufficient to cause large-scale damage. With increasing depths alternate mining sequences must be implemented to avoid tunnel and support damage
- Important parameters that must be rigidly controlled include the extraction ratio on the production level prior to undercutting, the shape of the undercut face, the rate of undercut advance and leads and lags between tunnels
- At depth high undercut abutment stresses will inevitably damage both rock and installed support on the level below. Rigid shotcrete lining can be extensively damaged. A phased approach to support installation limits the degree of damage. Final rigid linings and concrete footwalls are only installed once the undercut abutment stresses have passed over the area.
- A pre-undercut mining sequence where no development exists on the production level prior to undercutting is optimal from a geotechnical perspective. Many logistical challenges must be overcome before this mining sequence can be implemented. Premier Mine is working at solving these challenges.

Acknowledgements

The authors would like to thank the General Manager of Premier Mine, the Geotechnical Engineering Consultant and the Consulting Engineer of De Beers Consolidated Mines for permission to publish this paper. The assistance of colleagues on the mine in understanding and solving the problems of cave mining is acknowledged. We would like to thank Itasca (Africa) Pty Ltd and the Premier Mine draughting personnel for assistance with the diagrams used in this paper.

References

BARTLETT, P.J. Planning a mechanised cave with coarse fragmentation in kimberlite. Ph.D. thesis University of Pretoria 1998.

BARTLETT, P.J. Support in a mechanised cave at Premier Mine. *MASSMIN 92*. Johannesburg SAIMM, 1992. pp. 99–109.

KIRSTEN, H.A.D. and BARTLETT, P.J. Rigorously Determined Support Characteristics and Support-design Method for Tunnels Subject to Squeezing Conditions. *Journal of the South African Institute of Mining and Metallurgy*. vol. 92 no. 7 1992. ◆

AngloGold and Mintek plan to put GOLD to work*

AngloGold, the world's largest gold producer and Mintek, South Africa's national metallurgical research organization, today (Wednesday, 21 June, 2000) launched a pioneering joint initiative to pursue the research and development of industrial applications for gold.

Aptly named Project AuTEK, the purpose of the 50:50 joint venture is to exploit the unique properties of gold for industrial applications. The project will focus on the application of gold catalysis, and, in particular, on the metal's role in facilitating the catalysis of chemical reactions in industrial areas of economic and social significance.

Speaking at the launch of Project AuTEK, Dave Hodgson, AngloGold's executive officer responsible for technology, said: 'The changing emphasis of society towards a cleaner and more user-friendly environment has created new opportunities for gold which will be the subject of the collaborative venture's research'.

AngloGold plans to broaden the focus on industrial uses of gold by organizing a conference involving international researchers and possible commercial users of products in South Africa during 2001. Together with Mintek, the company hopes to establish research networks with international metallurgical research organizations.

Potential of gold catalysis

Dr Mike Cortie, manager of the project's research division at Mintek, said AngloGold and Mintek believed that a well-focused and directed scientific research programme had an excellent chance of establishing many additional uses of gold as a catalyst in air purification, automotive applications and in the chemical industry.

'The commercial application of the catalytic properties of gold has yet to be proven and tested. However, we hope that this research will result in the successful introduction of gold catalytic products used in air purification into the end-use market.

'Our immediate next step is to compare the potential gold catalysts to the existing ones and to establish their commercial viability. We have started our research by targeting the use of gold in catalysts designed to remove pollutants such as carbon monoxide from air.'

Cortie added that, 'at this stage we envisage that such catalysts would find application in office buildings, in the purification of air for the occupants of passenger aircraft and as a general solution to pollution. There is also technological proof that gold has potential application in certain types of fuel cells that provide environmentally-friendly power and in heavy industry chemical synthesis'.

Constructive partnerships

Mintek was selected as AngloGold's partner in this exercise as a result of the organization's long-standing involvement in the extraction, processing and application of precious metals and their alloys and compounds.

Commented Hodgson: 'The partners believe that the consumption of gold in any of the applications being investigated by Project AuTEK will be very beneficial for South Africa, particularly in terms of helping to retain jobs in the gold mining industry. Hence the co-ordination of industry and government research institutions in initiatives such as this is considered to be good for the industry.

'If successful, Project AuTEK will yield positive results not just for AngloGold, but for South Africa, the research fraternity, the commercial users of the developed products, and ultimately, the global gold mining industry.

'We hope that the benefit will flow from a more stable gold price driven by the increased demand from the industrial sector'.

Forming part of AngloGold's international marketing activities, Project AuTEK is the company's first foray into research and development in areas other than the traditional mining, engineering and metallurgical disciplines.

'We are all driven by a strong conviction that gold has a tremendous amount to offer and for AngloGold, the prize is beneficial and commercially viable industrial niches in which the metal can be optimally utilized,' said Hodgson. ◆

---

* *Issued by: Mike Cortie, Mintek, (011) 27 11 709 4485, (011) 27 82 576 6004 (mobile)*
e-mail: mike@mintek.co.za
Website: www.mintek.co.za