SINKING SHAFTS – VENTILATION AND HYGIENE CHALLENGES

LUKAS MACKAY

SAIMM SEMINAR

23 MAY 2012

IMPLATS
Distinctly Platinum

INTRODUCTION

- Papers presented the past 40 years relating to the ventilation & refrigeration requirements for sinking shafts:

  – "Ventilation for Sinking Vertical, sub-vertical and decline shafts" presented by DM Walters from Turgis Consulting during The South African Institute of Mining and Metallurgy Shaft Sinking and Mining Contractors Confer e 2009
  – "Ventilation of Sinking Shafts" presented by LJ Mackay, Ventilation Manager – Projects at Impala Platinum and Co-authored by Steven Bluhm, Director BBE Consulting and Alex Rawlins, Senior Consultant RME. This paper was presented at the Mine Ventilation Society conference in 2010.

LEGAL REQUIREMENTS

SINKING SHAFTS – VENTILATION & HYGIENE CHALLENGES

LUKAS MACKAY

SAIMM SEMINAR

23 MAY 2012

IMPLATS
Distinctly Platinum

MINE HEALTH AND SAFETY ACT

IMPLATS
Distinctly Platinum

- The MHSA requires a System of Occupational Hygiene Measurements. The action levels for the implementation of a monitoring program are depicted below.

- 9.2(2) The employer must establish and maintain a system of occupational hygiene measurements, as contemplated in section 12, of all working places where the following hazard limits prevail:

- **(a) airborne pollutants:**
  - particulates > 1/10 of the occupational exposure limit;
  - gases and vapours > ½ of the occupational exposure limit;
- **(b) thermal stress:**
  - heat >25,0°C wet bulb and/or >32,0°C dry bulb and/or >32,0°C mean radiant temperature;
  - cold <10°C equivalent chill temperature; and
- **(c) noise:**
  - >82dBLAeq,8h.

- The Mine Health and Safety act no longer prescribes a minimum air requirement (formerly it was $0.15m^3/s/m^2$ of face area). The regulations now refer to exposure limits. Schedule 22.9(2)(a) "Occupational Exposure Limits For Airborne Pollutants" provides a comprehensive list of airborne pollutants with its OEL.

OCCUPATIONAL EXPOSURE LIMITS

- **In this Schedule the following terms/abbreviations have the meanings as set out below:**

- **"Occupational exposure limit" (OEL)** means the time weighted average concentration for a 8 hour work day and a 40 hour work week to which nearly all workers may be repeatedly exposed without adverse health effects.

- **"Occupational exposure limit - Ceiling limit" (OEL - C)** means an instantaneous value which must never be exceeded during any part of the working exposure.

- **"Occupational exposure limit - Short term exposure limit" (OELSTEL)** means a 15-minute TWA exposure which should not be exceeded at any time during a workday even if the 8-hour TWA is within the OEL-TWA. Exposures above the OEL-TWA up to the STEL should not be longer than 15 minutes and should not occur more than four times per day. There should be at least 60 minutes between successive exposures in this range. An averaging period other than 15 minutes may be recommended when this is warranted by observed biological effects.

- For those substances for which no OEL-STEL have been specified, excluding airborne particulates, a figure of three times the occupational exposure limit to be used when controlling short-term excursions in exposure.

- **"Respirable particulates"** means the respirable fraction of airborne particulates.

OCCUPATIONAL EXPOSURE LIMITS

IMPLATS
Distinctly Platinum

Substance	OEL		OEL-C / STEL	
	ppm	mg/m^3	ppm	mg/m^3
Carbon Monoxide (CO)	30	35	C 100	C 115
Carbon Dioxide (CO_2)	5 000	9 000	C 30 000	C 54 000
Nitric Oxide	25	30	35	45
Nitrous Oxide	50	90	-	-
Nitrogen Monoxide	25	30	35	45
Nitrogen Dioxide	3	5	5	9
Silica Dust (Respirable)	-	0.1	-	-
Particulates not otherwise classified	-	3	-	-
Inhalable Particulates	-	10	-	-
Respirable Particulates	-	3	-	-

MHSC MILESTONES

IMPLATS
Distinctly Platinum

- The Mine Health and Safety Council (MHSC) has established the following milestone for limiting occupational noise as well as silica dust exposure and eliminating noise-induced hearing loss (NIHL) as well as silicosis:

- **Silica Dust:**
  - By December 2008, 95% of Individual exposures < OEL 0,1 mg/m^3.
  - After 2013, no new cases of silicosis amongst previously unexpected individuals , using current diagnostic methods.

- **Noise:**
  - After December 2008, the Hearing Conservation Program by industry must ensure that there is no deterioration in hearing greater than 10% amongst occupationally exposed individuals.
  - By December 2013, the total noise emitted by all equipment installed in any workplace must not exceed a sound pressure level of 110dB(A) at any location in that workplace (includes individual pieces of equipment.

BACKGROUND

SINKING SHAFTS – VENTILATION & HYGIENE CHALLENGES

LUKAS MACKAY

SAIMM SEMINAR

23 MAY 2012

IMPLATS
Distinctly Platinum

CURRENT PROJECTS

IMPLATS
Distinctly Platinum

18 SHAFT DETAILS

Planned Production	260 kt/mth
Reef mined	Merensky & UG2
Deepest working level	1840 m
Number of working levels	$7^1/_2$
Number of half levels	30 off
Strike	2.95 km per side
Total primary ventilation	1300 kg/s @ 5.0 kg/s per kt/month
Total refrigeration machine duty	58 MWR @ 228 kWR per kt/month

- ***General features:***
  - Dedicated No.18 Fridge Shaft with ultra-cold air will report to 33, 34 and 35 level.
  - Thermal storage [ice] will be used for load damping and energy management.
  - Ventilation districts will split above and below 32 level creating 8 off districts.
  - Backfill will be applied on deeper districts below 33 level.

18 SHAFT – SECTION VIEW

* Calculated from after BAC fans

18 SHAFT - REFRIGERATION

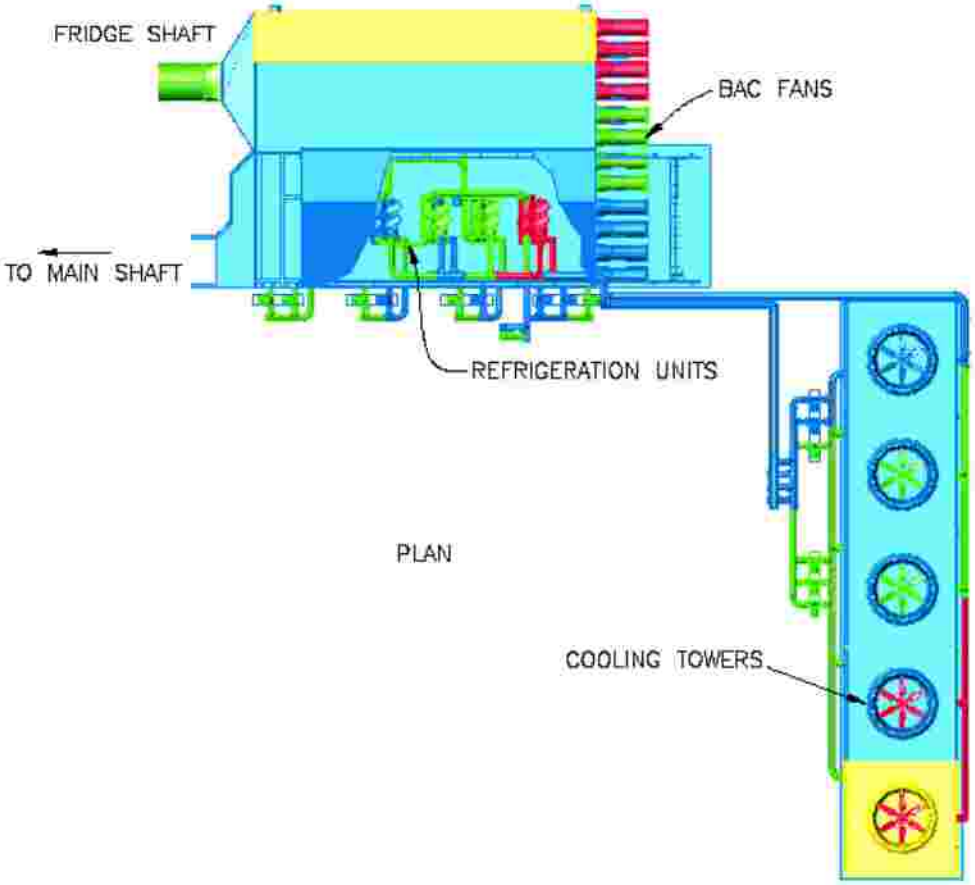

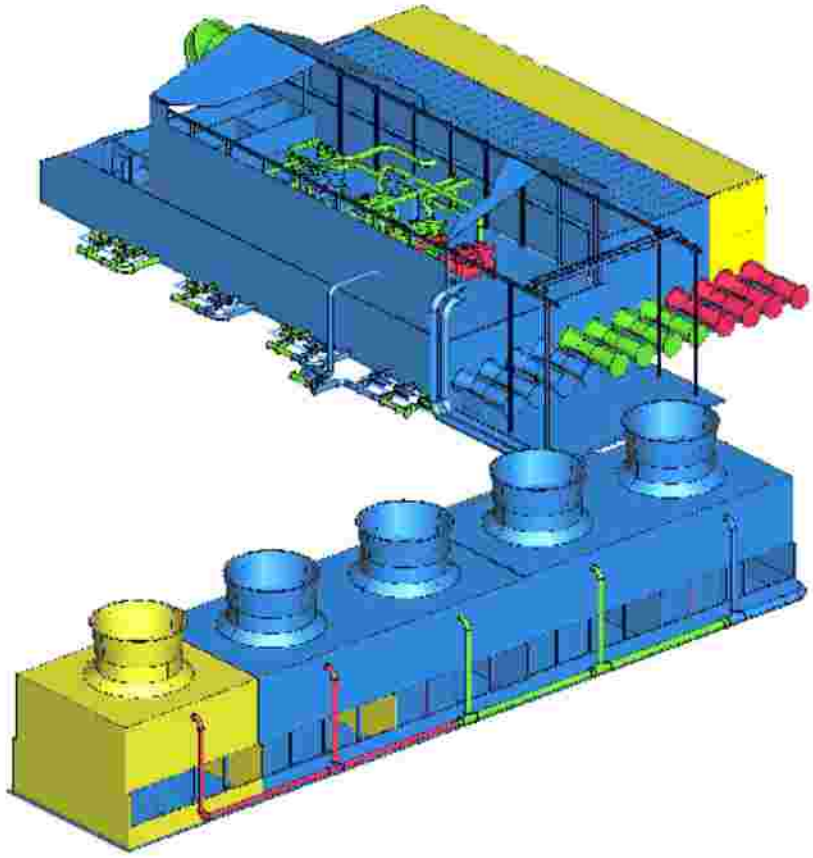

ISOMETRIC VIEW

VENTILATION SPECIFICATIONS FOR SINKING SHAFTS

SINKING SHAFTS – VENTILATION & HYGIENE CHALLENGES

LUKAS MACKAY

SAIMM SEMINAR

23 MAY 2012

IMPLATS
Distinctly Platinum

One Team One Vision With Pride

OVERALL DESIGN REQUIREMENTS

- The shaft ventilation system will be operated in accordance of the DMR guidance for multi-blast conditions for shaft sinking. The main parameters will be:
  - Forced ventilation will be not less than 0.25 m/s per m^2 onto face, which will be:
    - 23.3 m^3/s for Main Shaft [93.31 m^2]
    - 18.1 m^3/s for Vent Shaft [72.38 m^2]
    - 14.5 m^3/s for Fridge Shaft [58.1 m^2]
  - Exhaust flow will be at least double forced ventilation flow [0.5 m/s per m^2]

- Duct discharge to face distance will be as short as practicable and will not exceed 35 m
- There will be a minimum of 8 air changes before re-entry
- Nominal re-entry time will be less than 30 minutes
- There will be no travelling through blasting fumes in the shaft
- The immediate bank area will not be exposed to blasting fumes

SPECIFICATION FOR DUCT COLUMNS

- The shaft duct columns will have the following minimum specifications:
  - Configuration – longitudinally and radially welded mild steel
  - Steel wall thickness – 2.5 mm nominal
  - Corrosion protection – hot dipped galvanised protection [inside + outside]
  - Bend wall thickness and two column lengths after the bend – 5 mm minimum
  - Column lengths – 6 m each
  - Column coupling – FeMa joints
  - Column stiffeners – outer steel ring welded support at 2 m spacing [two per 6 m column length][a]
  - Column design friction factor – Atkinson [K] = 0.0025 Ns^2/m^4
  - Column design leakage factor – 1.1% per 100 m pipe length based on volume flow[b]

Note a. Pressure rating with above stiffeners to be 25 kPa minimum.

Note b. Installation and maintenance must ensure this leakage not exceeded.

VENTILATION COLUMN INSTALLATION

- The ventilation column support will include column brackets installed every 6 m as well as anti-creep brackets that must be installed at least every 200 m.

- The quality of the initial ventilation column installation and the on-going inspection by the Contractor will be an important part of the contract. Regular inspections and maintenance of the columns will be carried out during the project. The Contractor will provide procedures and documentation systems to ensure full compliance with these requirements.

- The Contractor will set up a formal contractual quality control and inspection procedures for:
  - Installation Quality Control Procedure (QCP) for the columns
  - On-going regular inspections of existing columns, joints and supports

FAN/COLUMN SPECIFICATION PER SHAFT

IMPLATS
Distinctly Platinum

Description	No.18M Shaft	No.18V Shaft	No.18F Shaft	
Main ventilation column in shaft				
Main shaft sink fans				
Amount	2	3	1	2
Position	Surface mounted			
Motor size	650 kW	650 kW	650 kW	650 kW
Fan type	Centrifugal fan			
Quantity	36 m^3/s	36 m^3/s	36 m^3/s	20 m^3/s
Pressure	11.5 kPa	11.5 kPa	9.5 kPa	11.5 kPa
Column				
Size	1 200 mm ∅	1 200 mm ∅	1 200 mm ∅	1 015 mm ∅

Description	1200 mm ø Column	1015 mm ø Column
Average flow rate	36 m^3/s	20 m^3/s
Nominal density	1.0 kg/m^3	1.0 kg/m^3
Friction [k] factor	0.0025 Ns^2/m^4	0.0025 Ns^2/m^4
Calculated required pressure at fan	11.5 kPa	11.5 kPa
Motor Rating	650 kW	650 kW

AIRFLOW REVERSAL IN MAIN COLUMNS

- The shaft sinking will be done on a general forced ventilation basis. The ducts [and fans] will be sized so that the forced ventilation can be achieved with the use of a single duct although both duct system will be generally used. During this general forced ventilation mode, the air will return up the barrel and the following principles apply:
- No travelling in the shaft through the plug of blasting fumes
- Immediate bank area will not be exposed to blasting fumes

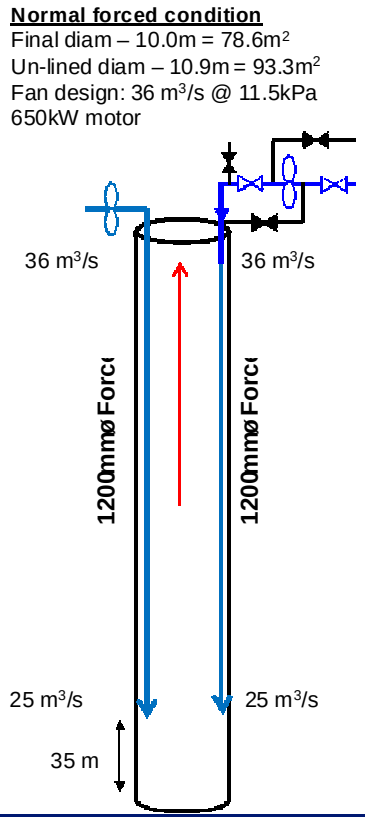

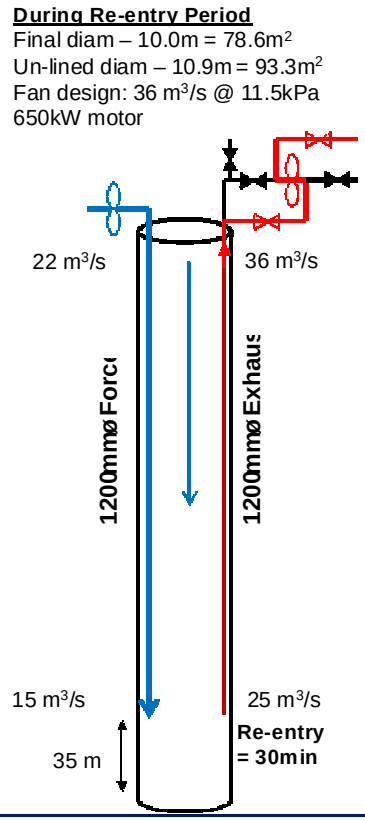

INTRODUCTION OF REFRIGERATION

- The introduction of refrigeration will be required at the depth of 1450 m*. At that stage, the duct system that does not reverse will be served with refrigerated air.

  * Does not apply to the Fridge shaft.

- For the Main Shaft, the refrigerated air will be supplied f the first cell of the bulk air cooler. There will be an insulated duct to feed air to the fan suction. The fan casing and the discharge duct into the shaft will also be insulated.
- For the Vent Shaft, the refrigerated air will be supplied f a temporary bulk air cooler unit to be installed near the fan suction. There will be an insulated duct to feed air to the fan suction. The fan casing and the discharge duct into the shaft will also be insulated. Chilled water from the first cell of the permanent refrigeration system will be used to serve the temporary bulk air cooler unit via a temporary pipe system.

DEVELOPMENT SECTIONS

- The multiple columns in the shafts will be used for on-station and off-station development generally in an exhaust mode. Once this stage is reached the cold downcast in the Main shaft barrel.
- During this phase provision is made to enable converting the forcing sink columns not equipped with four-gate systems to exhaust mode through the use of pre-fabricates adaptor pieces.

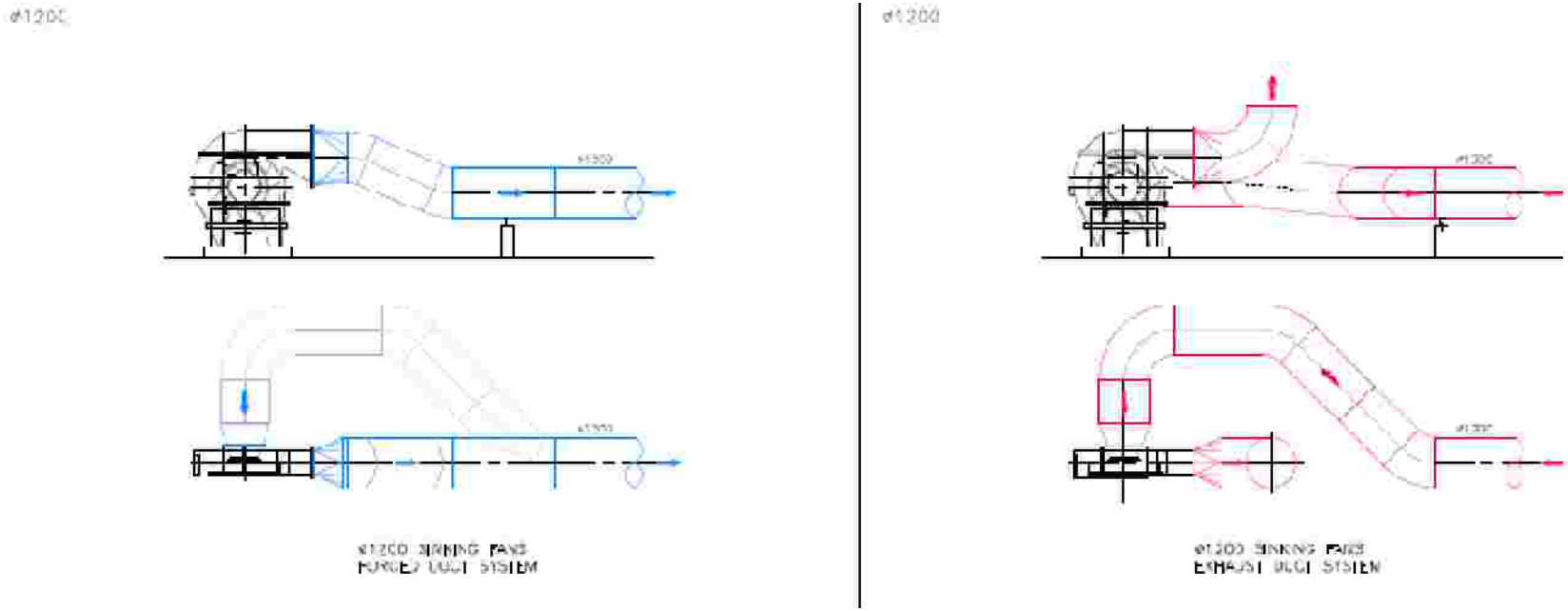

DIESEL EQUIPMENT FOR STATION DEV

- In particular, whenever diesel equipment is deployed underground, Tier 4 type* engines are preferred. But if not available, Tier 2 or 3 type* engines, operating on low sulphur diesel [0.03-0.05% = 300-500 ppm] and fitted with catalytic converters and particulate filters will be used. In addition, it is required that a competent engine-maintenance program will be in place.

- Dilution provision will be at least 0.07 m^3/s ventilation per rated diesel kW at point of use and 0.10 m^3/s ventilation per rated diesel kW in a ventilation district.

- Fire suppression equipment will be fitted to all vehicles and will be ANSUL systems or fully equivalent. Pneumatic cut-out switches must be installed in all diesel machinery to prevent the vehicle from being started again after the suppression system has been activated.

PRESSURE SURGE RELIEF MECHANISM

- Each surface fan and shaft column will be protected by fast-acting pressure-surge relief valve mechanisms. These devices will be installed on each exhaust column on surface at the fan and will consist of a gate [570/760 mm max] positioned on a single central shaft with sealing stop-ring and fast-acting pneumatic actuator. The functionality will be that when pressure surges above a critical value (e.g. 10 kPa), the relief valve will be activated.

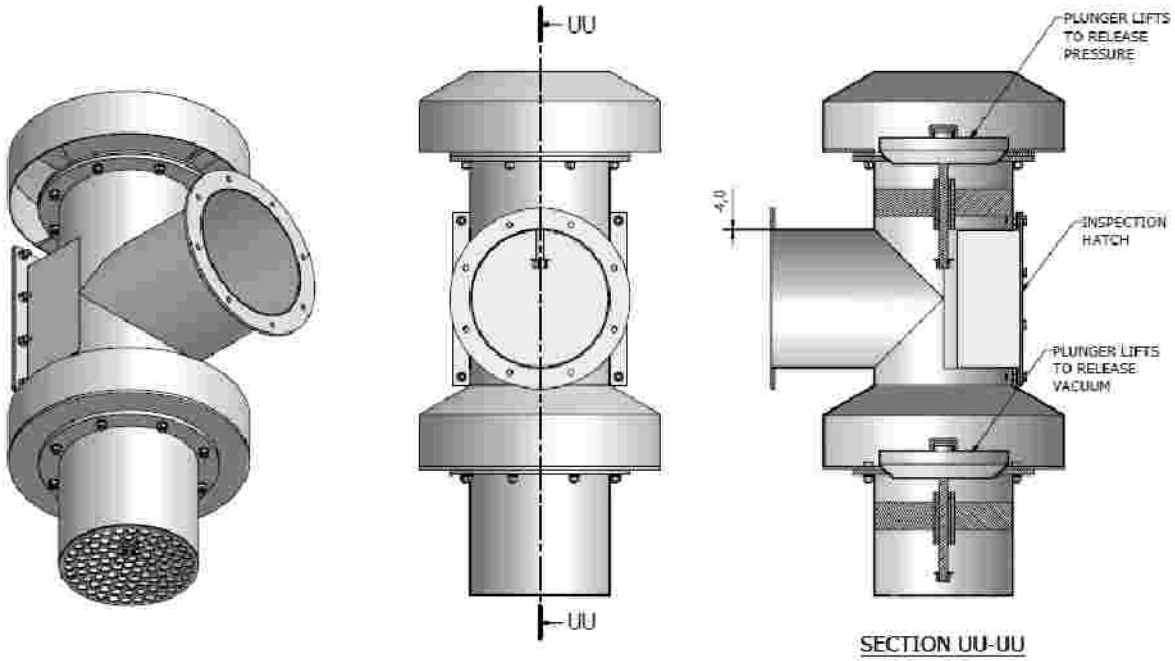

INSTRUMENTATION

- ***Instrumentation, monitoring and control system***

  – Each surface fan and shaft column will be served by an instrumentation, Programmable Logic Controller (PLC) and data logging station, measuring static pressure and air flow [velocity].

  – The pressure measurement and PLC system will be used to activate the fast-acting pneumatic actuator pressure surge relief mechanism.

  – The PLC system will be used to activate the mechanised actuators on the control gates of the four-gate systems [note that two of the gates will be required to modulate to achieve correct force flow].

  – The instrumentation will be linked to the shaft alarm mine-wide monitoring.

EMERGENCY POWER GENERATOR

- For the ventilation systems, an emergency diesel generator will be installed for the shaft sink, mine development and life-of-mine phases. The general design principles will be:
  - Emergency power for emergency ventilation needs [+ lights, + lamp room] will be provided
  - Emergency power system to be designed for shaft sink and development phases but same system to be used for permanent phase
  - Emergency system for ventilation will be static/permanent and not mobile
  - Emergency system will include ALL shaft sink fans [each with VSD drives]

- **The shaft sinking fans will be rated as follows:**

– Main Shaft	2 x 650 kW
– Vent Shaft	3 x 650 kW
– Fridge Shaft	3 x 650 kW
– Total	5.2 MW

- Past studies (e.g. No.16 Shaft project) indicated that the required power for emergency ventilation will be significantly less than half of the above rated capacity. If the shaft sinking fans are loaded to approximately 40% of their rating during emergency operations, the emergency diesel generator will need to be rated at 2 MW electrical for this purpose. This part-load operation on the shaft sinking fans will be achieved through VSD control equipment.

EMERGENCY POWER

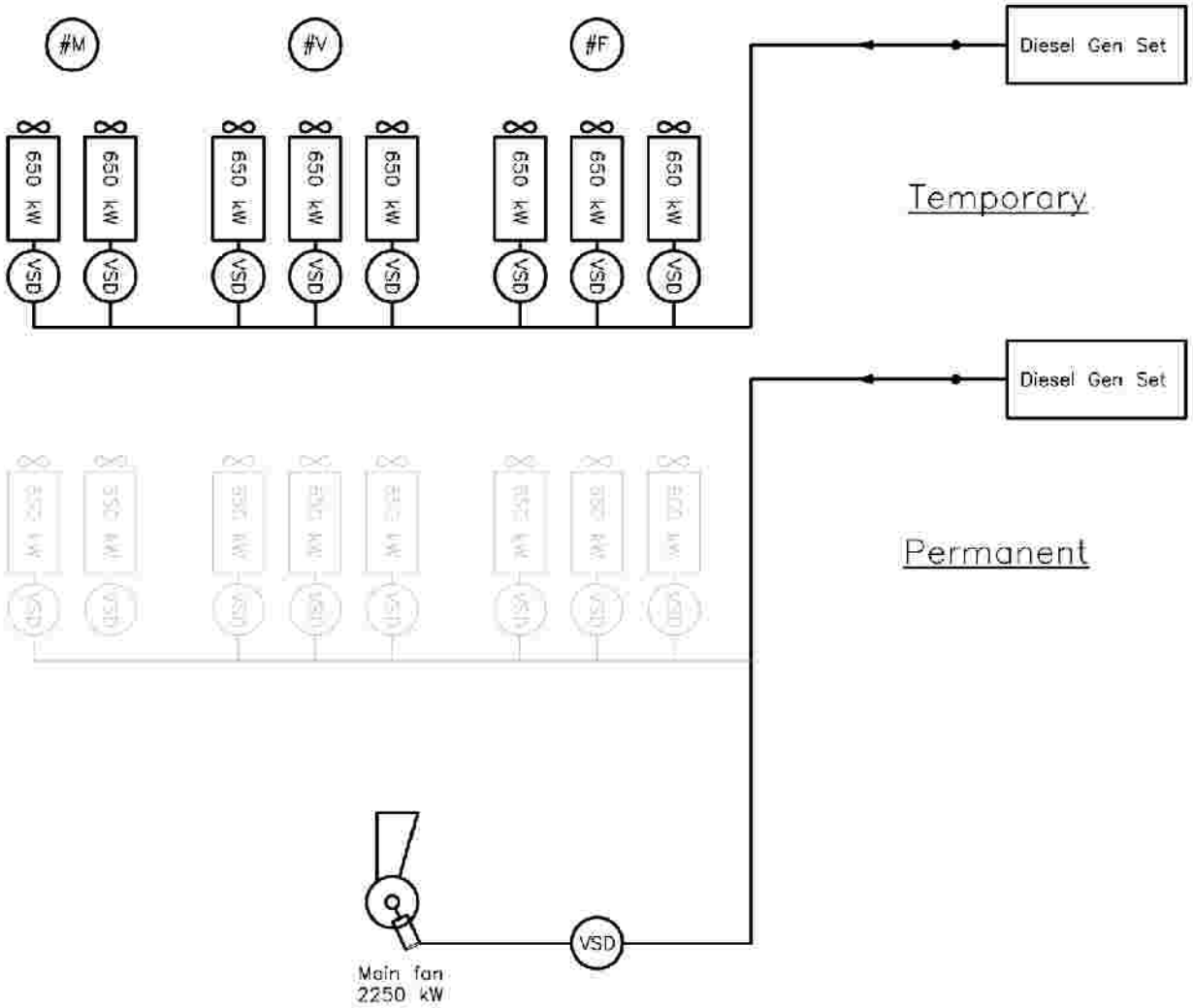

EMERGENCY POWER

- The same diesel generator capacity will be used for emergencies during the permanent life-of-mine phase, serving one of the main fans. The permanent fan station will comprise 5 x 2.25 MW sets. Using the 2 MW generator, one of the main fans will be loaded to about 85% of its rating during the emergency operation. This part load conrol will be achieved by inlet guide vane control.

- In summary, the emergency ventilation power generator will be used during the sinking period for the following purposes:
  - Simultaneously operation of sinking fans in all three shafts via variable speed drives
  - Time and attendance systems
  - Communication systems
  - Emergency lighting
  - Security
  - Lamp-room [continuous charging of cap lamps and gas detection equipment]
  - Operation of temporarily fans at the Fridge Shaft [if used as upcast during development]

- After the sinking period and during the permanent phase, the emergency ventilation power generation capacity will be used for the following purposes:
  - Operation of one permanent main ventilation shaft fan
  - Time and attendance
  - Communication systems
  - Emergency lighting
  - Security
  - Lamp-room [continuous charging of cap lamps and gas detection equipment]

MEETING THE NOISE MILESTONE

SINKING SHAFTS – VENTILATION & HYGIENE CHALLENGES

LUKAS MACKAY

SAIMM SEMINAR

23 MAY 2012

IMPLATS
Distinctly Platinum

One Team One Vision With Pride

MEETING THE NOISE MILESTONE

IMPLATS
Distinctly Platinum

- The target set for noise milestones remains a challenge, especially with regards to shaft sinking. Currently the mine, sinking contractors and relevant Original Equipment Manufacturers (OEMs) are investigating methods of reducing the noise levels of the equipment.

DESCRIPTION	Noise Reading Unmuffled dB(A)	Noise Reading Muffled dB(A)	Problems Encountered During Trial Phase	Comment
S140 Rock Drill	>110	>110	Ineffective Silencing	Further R & D
Jumbo Drill Rigs	>110	>110	Ineffective Silencing	Further R & D
Lashing Units	>110	>110	Ineffective Silencing	Further R & D

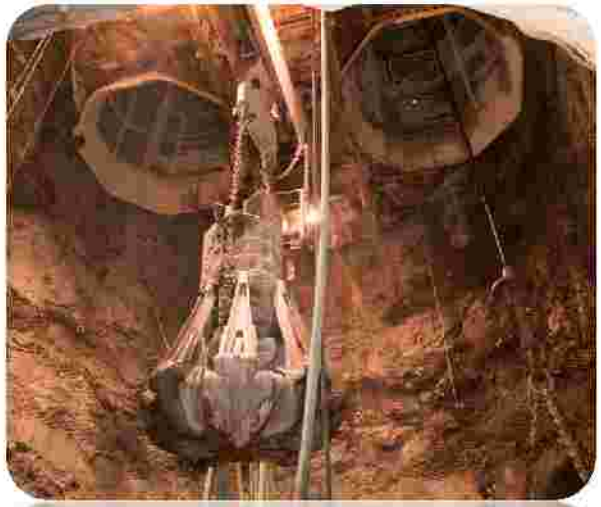

MEETING THE NOISE MILESTONE

IMPLATS
Distinctly Platinum

- The success of the roll-out of the acceptance of silenced equipment could not be made possible without the continuous involvement of the unions.

- The smooth implementation was achieved by maintaining good communication with the use of the following tools:

  – Monthly HSE Steercom Meetings
  – Monthly Noise Milestone Meeting
  – Quarterly Tripartite Meeting with DMR
  – Partial adoption of the MOSH Training Tool
  – Noise Banner displayed at the shaft bank, on station areas and at waiting places
  – OEM / Users / Suppliers involvement with silencing of equipment.

- ***Monitoring process***

- The monitoring process for all equipment includes:

  – Measurements as per guidance note. (RDNW(R)11/30/2:8-11)
  – Continuous personal monitoring as per schedule 9.2.2(c)
  – Quarterly Noise Milestone Reports are generated and submitted to the DMR. (equipment based)

MEETING THE NOISE MILESTONE

MEETING THE NOISE MILESTONE

- ***Hearing protection***
  - Impala previously embarked on a process to determine the ideal hearing protection devices. Following extensive research two types of hearing protection were adopted as the preferred hearing protection. This being the Noise Clipper custom made hearing protection device as well as the Uvex X-fit disposable hearing protection device.
  - The Noise Clipper facility has been considered as one of the possible leading practices.
- ***Training and awareness***
  - A number of processes have been implemented to ensure proper training and awareness which include:
    - MOSH training video's are used at Training Centres.
    - Employees receive personal training in the correct use of custom made hearing protection devices.
    - During safety meetings employees are informed about PPE which includes HPD's
    - HSE committee involvement in creating awareness.
    - Hearing Conservation Road Shows.

CONCLUSION

SINKING SHAFTS – VENTILATION & HYGIENE CHALLENGES

LUKAS MACKAY

SAIMM SEMINAR

23 MAY 2012

IMPLATS
Distinctly Platinum

CONCLUSION

- ***CONCLUSION***

This paper has presented some of the design guidelines followed for the ventilation of a number of deep sinking shafts at Impala Platinum. The development of these guidelines have proved their worth in that the application of sound engineering principles.

This means that required shaft sinking and associated development rates can be achieved while still providing sufficient cool, clean air to ensure a safe working environment.

At the same time attention is also paid to complying with Mine Health and Safety Act regulations as well as the Mine Health and Safety Council milestones noise.

- ***ACKNOWLEDGEMENT***

Impala's permission to present this paper is gratefully acknowledged.

QUESTIONS???

SINKING SHAFTS – VENTILATION & HYGIENE CHALLENGES

LUKAS MACKAY

SAIMM SEMINAR

23 MAY 2012

IMPLATS
Distinctly Platinum