THE JOURNAL
OF THE
Chemical, Metallurgical and Mining Society
OF SOUTH AFRICA.

The Society, as a body, is not responsible for the statements and opinions advanced in any of its publications.

Reproduction from this Journal is only allowed with full acknowledgment of the source.

VOL. VIII. NOVEMBER, 1907. No. 5.

Proceedings
AT
Ordinary General Meeting, November 16, 1907.

The Ordinary General Meeting of the Society was held in the Chamber of Mines, on Saturday, November 16th, Prof. J. Yates (President), in the chair. There were also present :—

31 Members: Dr. J. Moir, Messrs. T. L. Carter, R. G. Bevington, W. R. Dowling, K. L. Graham, A. McA. Johnston, G. O. Smart, Prof. G. H. Stanley, H. A. White, Prof. J. A. Wilkinson, E. H. Johnson, W. Beaver, E. H. Croghan, J. M. Eaton, N. M. Galbraith, G. Goodwin, J. Gray, H. H. Johnson, J. A. Jones, G. A. Lawson, C. W. Lee, H. Lea, W. P. O. Macqueen, J. E. Metcalf, H. F. Roche, A. Salkinson, S. Shlom, R. M. Torin, H. Warren, and J. O. Welch.

9 Associates: Messrs. A. E. Adams, J. C. Chilton, C. L. Dewar, J. A. P. Gibb, J. W. Hawthorne, J. H. Harris, R. W. Leng, W. E. Thorpe and J. Whitehouse.

11 Visitors and Fred. Rowland, Secretary.

The minutes of the previous monthly meeting, as published in the *Journal*, were confirmed.

NEW MEMBERS.

Messrs. Gray and Croghan were elected scrutineers, and after their scrutiny of the ballot papers, the President announced that all the candidates for membership had been duly elected, as follows :—

CHAPPELL, WILLIAM, French Rand G. M. Co., Ltd., P. O. Box 25, Luipaardsvlei. Mine Captain.

WALKER, JOHN FAIRFAX, East Rand Proprietary Mines, Ltd., P. O. Box 30, East Rand. Tube Mill Foreman.

The Secretary announced that the following gentlemen had been admitted as Associates by the Council since the last general meeting.

BRAZIER, H., Crown Deep, Ltd., P. O. Box 102, Fordsburg. Cyanider.

COCHRANE, A. C., Block A, Randfontein. Sampler.

COX, CHARLES THOMAS, East Rand Proprietary Mines, Ltd., P. O. Box 66, East Rand. Cyanider.

FOX, HERBERT, W., United States Reduction and Refining Co., Colorado Springs, Colorado, U.S.A. Superintendent.

MCSWEENEY, JAMES PAUL, Treasury G. M. Ltd., Cleveland. Assistant Sampler.

MOIR, Dr. W. I., Denver. Medical Practitioner.

MOORE, WILLIAM ROBERT, P. O. Box 2586, Johannesburg. Foreman Mason.

NICHOLSON, ARTHUR STEELE, Simmer and Jack Proprietary Mines, Ltd., P. O. Box 192, Germiston. Mill Foreman.

PEARCE, FREDERICK STEWART, New Unified G. M. Co., Ltd., P. O. Box 5, Maraisburg. Assayer.

PINTO, MICHELE, Komarovo Mining Co., Avzianopetrovsk, Gouvt. Orenbourg, Russia. Manager.

ROBINSON, SYDNEY GREENWOOD, c/o Messrs. F. L. Smidth & Co., 112, Palace Chambers, Westminster, London, S.W. Engineer.

SHED, WILLIAM B., Geldenhuis Deep, Ltd., Cleveland.

THOMAS, ALFRED MESSER, Simmer and Jack Proprietary Mines, Ltd, P. O. Box 192, Germiston. Assistant Assayer.

THORPE, WILLIAM EDWARD, East Rand Proprietary Mines, Ltd., P. O. Box 134, East Rand. Assistant Metallurgical Chemist.

The following Student has also been admitted.

TURNER, HUBERT FREDERICK SIDNEY, Transvaal University College, P. O. Box 1176, Johannesburg. Mining Student.

GENERAL BUSINESS.

The President: I move a vote of thanks to the Consolidated Goldfields of South Africa and to Mr. McArthur Johnston and his staff for their hospitality during our recent visit to their laboratory.

Mr. R. G. Bevington: I would like to second the vote of thanks. I am sure we had a most enjoyable and instructive afternoon. It makes one feel as though one wanted to go again.

The motion was agreed to.

The President: It has just been brought to my notice that Mr. Rowland, our Secretary, to-day completes his eleventh year of office as Secretary. I am sure you all hope with me that he will be with us another eleven years.

THE FILTRATION OF SANDS.

Mr. A. McA. Johnston stated that he wished to place on record in the *Journal* an experiment in connection with filtration of sands, and demonstrated the filtration with a small apparatus, using coloured water in the place of cyanide solution (see p. 153).

NOTE ON THE DAILY VARIATION OF RAND MINE VENTILATION.

By James Moir, D.Sc., M.A., F.C.S. (Vice-President).

In the course of my reply to the discussion on my last paper on ventilation, I gave an arithmetical formula for calculating at any time the total ventilation in the Ferreira Deep mine in 1904, a formula depending only on the reading of the wet-bulb thermometer at the surface in the shade (see this *Journal*, February, 1907, p. 256). This formula was $Q = 3{,}500 + 1{,}600\ (68 - w)$, and I stated that a similar formula could be got for any other mine with two nearly equal shafts, after experiments had been done to determine the new values of the constants involved.

The diagram there given shows the great annual variation of the ventilation, and the present experiments were made in order to get an idea of how the ventilation varies (1) from night to day, and (2) on rainy and rainless days, and this is what I mean by daily or diurnal variation.

It is evident that this question can be settled by obtaining a continuous record of the wet-bulb reading over a sufficient period and then finding out how much the above formula requires to be altered owing to the changes in the mine which have occurred since 1904.

This wet-bulb thermometer record is a thing which, so far as I know, has never been obtained before. The method consisted in arranging an ordinary metallic thermograph so that its sensitive part should be kept constantly moist. As the use of running water would give incorrect results, recourse was had to the capillary action of filter paper. The steel quadrant of the machine was first coated with a certain anti-rust composition of my invention, so as to prevent permanent injury to the machine, and then fitted with a quadrant of thick filter paper having a "tail" dipping into water, and the whole was exposed (without its cover*) on the headgear of the downcast shaft of the Ferreira Deep from Sept. 16 to Sept. 30, inclusive. I have to thank Mr. W. E. C. Mitchell for his courtesy in arranging for a suitable position for the instrument on his mine. It was fortunate that during this period the weather exhibited practically all the possible varieties which occur in a whole year, so that it was unnecessary to run the machine any longer. I should mention that the machine was first calibrated by means of a standard wet-bulb kindly lent me by Mr. R. T. A. Innes.

In addition a couple of rough measurements of the air in the shafts (by anemometer) were made to see if the 1904 formula still held. It was found that the air current was roughly 25% better than it was in 1904; and consequently the formula for calculating ventilation from the wet-bulb reading must be altered to this extent.

It is now, roughly, Q (quantity in cub. ft. per minute) $= 7{,}000 + 1{,}800\ (68 - w)$.

The actual observations were:—(1) downcast, clear day, $T = 68{\cdot}5$, $w = 56{\cdot}5$, $Q = 30{,}000$. (2) upcast, moist weather, $T = 55$, $w = 53$, $Q = 32{,}000$; but, of course, with this method of observation the error may be as much as 10%, whereas those of 1904 were got by an exact method.

The thermograph records obtained are reproduced opposite: they had to be redrawn owing to their exposure to the weather—and Table A gives an abstract of the resulting readings, and the calculations from the above formula.

* It would have been better to enclose the whole in a Stevenson's screen.

Table A.

Date. SEPT.	Maximum depression of wet-bulb.	Minimum humidity per cent.	Minimum depression of wet-bulb.	Maximum humidity per cent.	Maxim'm distance of wet-bulb from 68°.	Minimum distance of wet-bulb from 68°.	Maximum quantity of air supply in cub. ft. per minute.	Minimum quantity of air supply in cub. ft. per minute.	Diurnal variation, in cub. ft. per minute.	Percentage diurnal variation from night to day.
16	5	67	1	93	24	9	50,000	23,000	27,000	54% less
17	9	55	1	93	24	11	50,000	27,000	23,000	46 ,,
18	3	80	0	100	23	12	48,000	29,000	19,000	40 ,,
19	0	100	0	100	20	16	43,000	36,000	7,000	16 ,,
20	0	100	0	100	22	20	47,000	43,000	4,000	9 ,,
21	7	62	0	100	22	14	47,000	32,000	15,000	32 ,,
22	8	58	0	100	28	15	57,000	34,000	23,000	40 ,,
23	11	47	4	71	29	18	59,000	40,000	19,000	32 ,,
24	19	30	1	92	26	15	54,000	34,000	20,000	37 ,,
25	18	32	3	80	25	13	52,000	30,000	22,000	42 ,,
26	21	28	0	100	22	11	47,000	27,000	20,000	42 ,,
27	14	43	7	59	21	7·5	45;000	20,000	25,000	55 ,,
28	15	40	3	80	19	9·5	41,000	24,000	17,000	41 ,,
29	15	40	3	80	20	7	43,000	19,500	23,500	55 ,,
30	16(?)	38	1	93	18	8(?)	40,000	21,000	19,000	47 ..

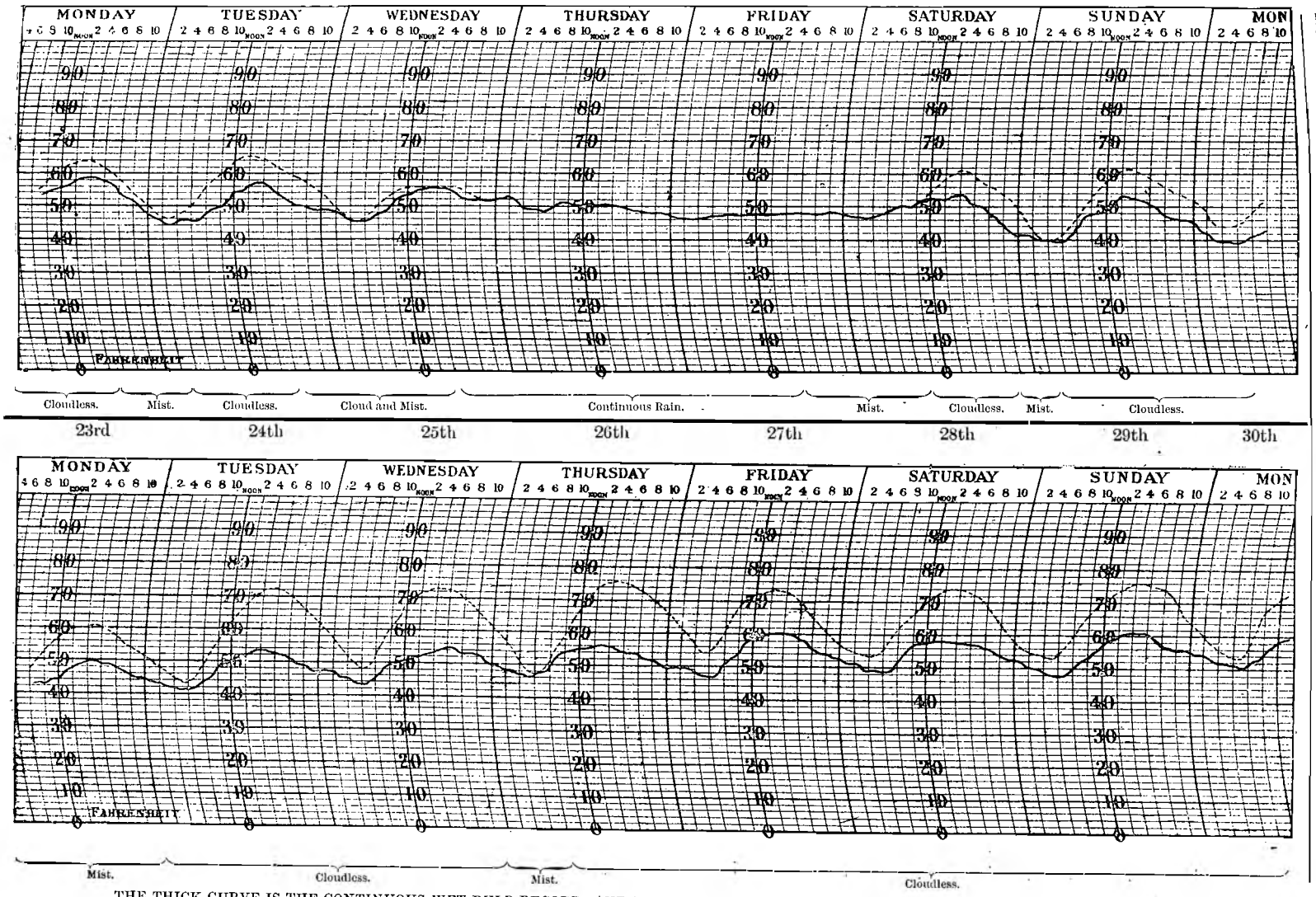

LOOKED AT FROM THIS SIDE, THE THICK LINE IS A GRAPHIC RECORD OF THE CHANGES IN THE VENTILATION, THE ZERO CORRESPONDING ROUGHLY WITH 12° F. (WET-BULB).

16th 17th 18th 19th 20th 21st 22nd 23rd

THE THICK CURVE IS THE CONTINUOUS WET-BULB RECORD, AND THE DOTTED ONE THE ORDINARY (DRY-BULB) RECORD FOR THE PERIOD.

FIG. I.—SHOWING VARIATION OF TOTAL VENTILATION DURING SEPT., 1907, IN THE FERREIRA DEEP MINE.

It will be seen that the maximum quantity of air in the whole period was 59,000 (which is much the same as the maximum observed in 1904), but it is probable (from the fact that the lowest temperature observed was 39°) that in the coldest "snap" of the year, which would be about 32° F. wet-bulb, the ventilation will now rise to 70,000 cub. ft. per minute.

The minimum observed was 19,500 this time (in 1904 it was 14,500), corresponding roughly with the general improvement due to the increased size of workings. I do not know exactly how many workers are underground at any one time—perhaps Mr. Mitchell will oblige—but assuming 650, this gives 30 cub. ft. per man per minute, the maximum being about 100 cub. ft. per man.

In addition the daily averages and the total average have been obtained by the use of the planimeter on the curves, with the following results:—

TABLE B.

I. Date (24 hours from 10 a.m. in each case).

	Average wet-bulb.	Average value of (68 – w) Deg.	Calculated average quantity of air.	Weather.
16—17	51·5	16·5	37,000	Morning mist
17—18	50	18	40,000	,,
18—19	52	16	36,000	Mist and rain
19—20	48·5	19·5	42,000	Continuous rain
20—21	48	20	43,000	
21—22	46·5	21·5	46,000	Dull
22—23	45·5	22·5	47,000	Clear with occasional mist
23—24	45	23	48,000	
24—25	48·5	19·5	42,000	
25—26	50·5	17·5	38,000	
26—27	52	16	36,000	Cloudless
27—28	54·5	13·5	31,000	
28—29	53·5	14·5	33,000	
29—30	56	12	29,000	

	Wet-bulb.	(68 – w.)	Quantity.
II. General average of the fortnight	50·2	17·8	39,000 cub. ft. per minute.

This is, on the previous assumption as to number of workers at a time, equal to 60 cub. ft. per head, which, I think everyone will agree, is very respectable.

With regard to the formula used ($Q = 7,000 + 1,800\ (68 - w)$) I wish to remark in order to prevent misunderstanding, that the wet-bulb is not the sole factor determining ventilation; for example, the number 1,800 in the formula really contains as its factors quantities which express (1) the square root of the depth of the shafts, (2) the section of the shaft and the rubbing-surface of the whole length of the air-way.

Again, the figure 68 is intended to be the average temperature of the upcast air in this particular mine, so that if one wished to modify the formula for a deeper mine, say, 4,000 ft., one would have to alter it not only by multiplying the factor 1,800 by the square root of the ratio of the depths of shafts in the two mines, but also by increasing the figure 68 to about 78. We thus have two factors favouring increased ventilation at greater depths, as against the one contrary factor of increased friction.

The President: Our transactions are becoming a mine of information in connection with this very important subject of ventilation, and we are especially indebted to Dr. Moir for the data and results of experiments which he has carried out at considerable trouble to himself. I move a vote of thanks to Dr. Moir for his note of this evening.

Mr. T. Lane Carter: I would like to second the vote of thanks. I think these theoretical deductions agree well with our practical experience. I think Dr. Moir said he got the worst results on a very hot day. I have seen this exemplified on the Rand in a startling manner in mine air ways; where during the winter the air-current was so strong that you could hardly carry a candle, whilst in the hot December days in the same place the ventilating current was almost stagnant. This confirms what Dr. Moir has pointed out theoretically.

Dr. J. Moir: It appears that this time of the year is really the worst for ventilation, contrary to what one would expect from the analogy of other countries, where two months after midsummer would be the hottest period, and the worst for ventilation.

THE INCIDENCE OF METHODS OF PAYMENTS ON THE EFFICENCY OF MINERS.

By KENNETH AUSTIN, M.Am.I.M.E.

In the relations between employer and employee nothing has attracted so much attention as the equitable payment for labour; the workman has to be fairly paid, and the capitalist or saver has to be rewarded and protected.

It is a well established fact, admitted by workmen and employers, that there is a considerable difference even amongst workmen when subject to the same conditions. One will waste his own time and his employer's capital, another will make the best of his time, increase the capital, and economise in every direction. It is quite right that labour should be fostered, but capital must also be guarded from loss, so

that the advance of industry and of the community, can be secured with some degree of certainty.

The general condition of the wage-earner has been evolved after many struggles to secure the highest possible reward for labour. The capitalists, on the other hand, have not been slow to seek those sources from which they can obtain the highest and most permanent return for capital invested. All alike are subject to the laws of supply and demand.

The object of these few notes is to state the various methods of labour payments current in the Transvaal, and to point to the evil which will arise, if at any time an artificial arbitration law should be rushed over the heads of common-sense people who have made this country their permanent home, and who will permanently feel the effects of all "class" legislation.

"Day's pay" is generally treated as if it did not involve a contract, but, of course, this is an error. The day's pay man has few or no risks, but he is always subject to the 24 hours' notice of discharge, and because of this insecurity of employment the best results are seldom obtained. In order to counteract the evil effects of this system, "bonus" schemes have been devised and tried with varying success. Universal admiration or satisfaction has, however, not accompanied any "bonus" system.

The "contractor" or piece-work man is still with us, and the writer is of opinion that this system of payment is the best, because with it both employer and employee will, under proper conditions, have the least cause for grumbling or dissatisfaction. Some contractors are useless and ought to retire from the business of "leaving the company in debt," which has been in the past their regular occupation; other contractors have followed on in the same localities as the last named, and have made money and completed contracts with full satisfaction to themselves and their employers.

Everything is bound up in the one word "efficiency." If you pay labour inadequately, the best men leave the industry; if you pay too much, you increase the difficulties with which the industry is at present contending. What is a fair remuneration? How can it be arrived at? The law of supply and demand has an incidence on mining as on other professions, and as regards underground work the manager and mine-captain, who are in daily touch with the labour supplies and the conditions of work, are the most likely persons to form a correct estimate as to what constitutes fair pay. The employer and employee must, however, be free from restrictions, excepting those which regulate the rights of the person and the preservation of life and property. The intervention of Labour Unions and such like are detrimental to the maintenance of a good understanding between the contracting parties. Freedom of contract must be made absolute. Persons not familiar with a mine and unacquainted with the varying conditions of every working place cannot know as much as the contractor, the mine manager, and the mine-captain, concerning the equity of the terms and conditions of contracts.

It would be advisable to have long contracts of, say, 3 to 6 months, in order to attract steady men and secure regularity of output. Security should be provided by the contractor, or 25% deducted from each month's payments to ensure the proper performance of the contract. I have not entered into any details as to tendering, etc., but these will readily suggest themselves. Payments must be based upon the work done by the best workmen and not on that done by the inefficient.

The following briefly summarises some of the advantages and disadvantages of the various systems:—

DAY'S PAY.

Disadvantages.—(*a*) A large amount of super vision is required.

(*b*) There is little or no incentive for the miner to do a good day's work.

(*c*) Inefficiency of coloured labour is accentuated where the white labour is inefficient.

(*d*) Carelessness always exists in the use of supplies.

BONUS SYSTEMS.

Disadvantages.—(*a*) A large amount of supervision is needed.

(*b*) Complicated accounts are involved.

(*c*) The conditions of mining work are too varying for any bonus system to be applied with satisfaction.

(*d*) There is always dissatisfaction among the workmen with the results obtained.

CONTRACT SYSTEM OR PIECE WORK.

Advantages.—(*a*) Less supervision is needed.

(*b*) There is greater incentive for both white and coloured labour to do their best work.

(*c*) There is an early start and a late finish of the shifts.

(*d*) Simplicity of accounts.

(*e*) Satisfaction to workmen.

Disadvantages.—(*a*) There is carelessness in following ore bodies, and an unnecessary amount of waste is often mined.

(*b*) To make big fathomage there is an inducement to carry the excavation regardless of changes in the contour of the ore body.

(*c*) There is a difficulty in fixing terms.

In all the systems enumerated the most careful measurement is needed in order to obviate any grievance or misunderstanding. Some mines have an especially bad reputation in this respect.

The writer has heard charges of favouritism levelled at mining officials, but such charges can generally be dismissed; naturally a manager engages contractors upon whom he can rely. When the "man in the street" better understands the great responsibilities resting upon all who are in charge of mining operations he will be less inclined to interfere with the necessarily somewhat autocratic systems of management. Some, who are engaged in directing mining work, may be inclined to look at this question from the technical point of view only, but it is necessary also to insist upon the commercial aspect receiving attention, as it is affected by the varying labour conditions. In discussing the systems for labour payment we must also take into account the maintenance of a regular supply of young men, who will be willing to go through the necessary training, and we have to decide the scale of remuneration which will induce them to follow the occupation of miners.

Several financial experts have called for educational facilities,—Sir George Farrar, Sir Percy Fitzpatrick, Messrs. Lionel Phillips, Chaplin, Fricker, Francke, and others have pointed out in the clearest possible manner the need for reform and development in this connection. All our aims should be directed to the best methods of training a good class of workmen, and, when they are trained, the conditions should be such as to secure for them permanency of employment. The more permanent we make the employment the greater will the efficiency be, and the more attractive will it be to workmen; the wage is also lower, and, as a rule, the better are the economic conditions when constant employment is assured; all these interact on each other. The cleaner we make our mines the healthier they will be, and a greater number of good workers will be attracted to mining.

There are other matters which have an incidence on the contract system of payment, an interesting one being the prices charged for supplies to contractors. Explosives are charged out at prices which show large book profits, but it would appear to be the better plan to charge everything at cost price. Comparisons of costs could then be better made. It may be said that as all contracts are contingent upon the payment of the present general high charges for supplies, no harm is done; but the weakness of this case lies in the fact that the enhanced contract prices for mining, necessitated by these high charges, cause a loss to the mining companies in one direction, balanced only by a "book profit" on the other side.

The President: These few notes of Mr. Austin's are submitted for the purpose of drawing discussion on this important subject of payment and efficiency, and as many of you are well qualified to speak on this matter I hope you will come forward and let us have the benefit of your views. I move a vote of thanks to Mr. Austin for his notes.

THE UTILISATION OF WASTE HEAT IN SLIMES SETTLEMENT.

(*Read at June Meeting, 1907*).

By A. Salkinson (Member).

REPLY TO DISCUSSION.

Mr. A. Salkinson: When writing this paper, it appeared doubtful to me whether it would be possible to obtain an exhaustive discussion on the subject, as until metallurgists have had the opportunity of experimenting with a process, they are naturally averse to hazarding opinions. I am the more grateful to those gentlemen who gave the result of their experience during the criticism and would particularly express my thanks to Mr. Laschinger, who has given me such a welcome opening for reply.

Commencing with the principle that the application of heat accelerates the speed of slimes settlement, I have only heard of two authorities, who have expressed opinions at variance with this statement. The first is the gentleman referred to by Mr. White, and the second, one of our prominent metallurgists who informed me that temperature had no influence on the rate of settlement. It is very easy for everyone to satisfy himself on that point, and in answer I shall only say, "try it."

With regard to Mr. Dowling's remark about the greater decomposition of sulphur compounds at a higher temperature, I quite agree with him that such decomposition would be hastened by heat; but I do not think it is noticeable on a practical scale, at least as far as my own experience serves.

Mr. White's experiments in increasing the amount of lime are interesting, more particularly so as many cyaniders hold the impression, that after reaching a certain point considerably below that mentioned by him, any additional quantity has no appreciable effect on either the rate or density of settlement. I am pleased that he finds no evil effects from the use of mill water of a temperature of 30° C. [86° F.] In our case we have not exceeded 80° F., in fact, the mill water is regulated to be practically of a constant temperature of about 78° F. When he mentions the removal of cooling towers, I do not quite agree with him, suggesting instead that any waste heat necessary might be absorbed by cyanide solution, etc.,

before the exhaust steam enters the condenser, but that afterwards the usual cooling plant should perform its ordinary work, thus helping the engineering department by the production of a greater vacuum than at present obtainable. In this connection, I may state that recently the sand solutions on the Wit Deep have been heated about 7° F., by passing through a boiler shell on the way to the treatment tanks; the heat is obtained from the cooling water of a condenser passing through the boiler tubes on its way to the cooling towers, thus giving at the same time a little more efficiency to the work of the condenser. The experiment has not been carried on long enough to give definite results, but seems to have had the effect of lowering the assay value of the last drainings to a certain extent.

Mr. Lea deals with the subject in a manner that appeals to the practical man, and again illustrates that an ounce of experience is often worth a ton of theory. His experience was evidently most conclusive, and I am sure that we are all grateful to him for publishing results obtained on a large scale.

Mr. Laschinger quotes some very interesting figures, which I am quite willing to accept up to the point where he applies them to practical deductions; from there his conclusions are erroneous or misleading. He commences by calculating out how much heat is required to raise a ton of water 20° F. This has nothing at all to do with the problem, which I would state in this way. "Given so many hundred or thousand tons of solution, how much heat is required to maintain the temperature of this mass at a given point?" In other words, the heat to be added daily is not that required to raise a quantity from the normal temperature to so many degrees, but only that necessary to compensate for the cooling effect once the total amount has risen to the desired point; for if the temperature of a mass of solution were raised 20° F. in one day, it would still have retained a considerable amount of this heat after the lapse of 24 hours. On a 200 stamp plant, it will take at least a week to obtain this ultimate temperature, and if Mr. Laschinger cares to revise his figures on the above basis, he will find that the final temperature of the solution will be considerably higher and his conclusions wrong. Hence the cost, supposing heat had to be paid for, would be very much less than 3½% on 2 dwt. slimes, and instead of the whole waste heat available being sufficient to raise mill water, sands and slimes solution 17° F., he would find after a little time the temperature very much greater than his calculations show. Having thus started on a wrong basis, he must pardon me if I state that the deductions drawn from his figures are not approximate; they are entirely wrong.

The second part of his criticism is quite on a par with the first half. A good maxim to keep in mind in connection with any proposed alteration is:—Where there is a will, there is always a way. Might I suggest this as an answer to the next paragraph where he talks of the great difficulty of obtaining a reasonable benefit from the waste heat, which the engineers on the Rand are so anxious to get rid of. It is being done on the Wit Deep for one year already, and why can it not be done elsewhere? Instead of the very great expense and the complicated system of control of which he speaks, it is of a comparatively trifling cost and so simple of operation as to be practically automatic. If he or any other member of this Society cares to come to the Wit Deep, I shall be pleased to show him the method, whereby most of the waste heat from a non-condensing engine; and at least a portion of the waste heat from a condensing engine, is being utilised at the present moment for the purpose of heating mill water, sands and slimes solutions. His fears about the mill water getting too hot are quite groundless; our resident engineer, Mr. W. Thomas, informs me that it takes him two minutes per day to regulate that, and as for the cyanide solutions, the hotter they get the better.

Further he states—"it must not be assumed that this so-called waste heat is all wasted because engineers in these days are making strenuous endeavours after efficiency and the prevention of waste of any kind." Why only engineers? For what reason is the metallurgist ruled out of court, who is also striving after efficiency? and if a plan is proposed by which both engineer and metallurgist may gain, why adopt a dog-in-the-manger policy, and deny to the cyanide plant the benefit of waste heat?

Again, I shall be pleased to show him one way, in which waste heat from a non-condensing engine is being utilised solely for the benefit of the engineering department; an installation which was erected as a direct result of the experience gained with my boiler, pump and piping. In fact, I think he must be referring to this identical feature, when he mentions exhaust feed water heaters. Yet there is plenty of waste heat left for far more than all my requirements.

We all know that the subject of heating mill water is not a new one, but I must point out that the reason why we are heating it, is a new one, viz., to obtain a better settlement of slimes; from what I have been able to gather in conversation with mill men, there is no objection to the mill water being a little hotter than normal, as long as the temperature remains constant, and in any case there can be no logical objection to keeping the temperature of the mill water at summer heat.

during winter months, which was my original intention. I cannot but think that the next paragraph is a little needless, where he says, "The experienced engineer is not looking for troubles and further complications of plant, although he is at all times ready and willing to work out the practical details of any scheme which has for its object the betterment of conditions of working or increased efficiency on the mines in conjunction with either the miner or metallurgist." I think we take all that for granted, but I must say that the way in which I was met by our resident engineer, Mr. W. Thomas, was very different from Mr. Laschinger's attitude. He also was not enthusiastic until he saw how simple the proposed plan was and where his department would benefit; since then, he has been as enthusiastic as any one could desire.

To take the installation of the two boilers for the exhaust steam of the winding engines, he informs me that the water condensed far more than pays for the little extra back pressure, which amounts to 3 lb. The cost of the extra pumping I have already given, say, £20 monthly for the two pumps, which is defrayed by the cyanide works and pays for itself many times over. As for the mill water, apart from the benefits derived, it is actually cheaper to run some hot water from the condenser to the return water tanks, as the height to which the water is being pumped is 18 ft. less than the top of the cooling tower. The regulation of the mill water temperature is the only part that requires any supervision, the rest of the heating process is automatic, and there is neither trouble nor complication.

I can only express my regret that he was so unfortunate with the plant for which he was asked to make estimates for the cost of utilising waste heat; I cannot help thinking that it must have been quite an exceptional case. Take, for example, a condensing engine; is there anything impossible in the idea of passing the exhaust steam or even a portion of it through one or several boilers on the way to the condenser? The pump and piping are easy enough, and the strenuous efforts of his engineer will easily overcome any little obstacles.

Assuming that by any chance the solutions should get too hot and the pump be stopped, the engineer would be in no worse case than at present, whilst when solution is passing through the boiler, he obtains a greater vacuum. Another objection that I have often heard raised, is the distance of any available waste heat from the cyanide plant. It may cost more for the greater length of piping necessary, but the cost of pumping liquids over even great distances is not so high, if the proper kind of pump and sufficiently large piping are installed in a proper way.

Mr. Laschinger states that warm water throughout the plant would mean increased water losses by evaporation; I really do not see how that is possible. Under normal conditions so much heat is being wasted, which is dispersed either through the evaporation of water or through conduction. Why more water should be evaporated when this same amount of heat is spread over a larger bulk I cannot understand, "where treatment capacity is ample (as it should be for efficient work)." Now I am quite prepared to grant that there is a large amount of original sin inherent in the ordinary cyanider, because the man who admits that his plant is large enough or good enough has not yet been born. But, assuming that such a plant existed, and it were decided to increase the battery, it would, as he says, be a question of cost whether to erect more tanks for the slimes plant or to instal an arrangement for the utilisation of waste heat. The total amount for the erection of the two boilers, pumps, etc., in connection with the heating of the slimes plant solution on the Wit Deep came to a little under £500. If it had been decided to erect extra tanks, instead of adopting the present system, five additional tanks would have been required at a cost of about £5,000.

His next reference is to the increased amount of dissolved gold caused by raising the temperature. I am pleased to give him the figures he wants, but would ask him whether he would expect the total amount of undissolved gold to remain constant with an increasing charge value?

I would like to repeat my statement, that the benefit of heating slimes solutions and thus getting a better settlement and extraction is proved beyond all doubt on a plant of insufficient capacity. Although our slimes plant is so small, corresponding on a monthly tonnage of 10,000 to 646 cub. ft. per ton treated per 24 hours, including collectors, or 474 cub. ft. per ton treated per 24 hours, taking treatment tanks only, the extraction of gold through the use of heat has greatly improved in spite of a bigger tonnage, as shown by the following figures:—

	Average Monthly Tonnage.	Average Theoretical Extraction.	Average Actual Extraction.
May to Oct., 1906	8,840	75·20%	74·87%
" 1907	10,309	82·33%	82·17%

N.B.—Gold from slimes dam not included.

Heat, and heat alone has made this difference and if, as I hope we shall by next winter be able to increase our minimum temperature, I can safely predict even better results for the future.

In this connection I would remind you that according to Mr. Laschinger (*April Journal, 1904,*

	Charge Value.	Undissolved Gold.	Percentage of Dissolved Gold.	Remarks.
May to Aug., 1905	1·627	·191	88·26	Ordinary winter temperature.
Nov., 1905, to April, 1906	1·544	·136	91·19	Ordinary summer temperature.
May to Aug., 1906 ...	1·536	·157	89·78	Winter temperature and small amount of heat for 2nd transfer (experimental work).
Nov., 1906, to April, 1907	1·898	·135	92·89	Summer temperature and heat for 2nd transfer.
May to Aug., 1907 ...	2·024	·148	92·68	Winter temperarure and heat for mill water, 2nd transfer and heat for 1st transfer from July.

p. 360) he considers it necessary to have for a 200 stamp mill 1,050 cub. ft. of vat capacity per ton of slimes treated per day, though the average Rand figure is probably nearer 900 cub. ft.

Although Mr. Laschinger questions the simplicity of the process, yet I can assure him that it is quite as simple and inexpensive as I stated, and hope to be able to convince him when he comes to inspect the plant.

In conclusion, I would again express my gratitude to my critics, and more particularly to Mr. Laschinger, who, although he has attacked the process in every way, has, I feel sure, done so in no spirit of unreasoning antagonism, but with a view to stimulating discussion and elucidating points of interest, which might otherwise easily have been missed.

The President: I must congratulate Mr. Salkinson on his reply, and I hope that at some future time he will be able to furnish further figures in connection with this work. I am inclined to think that it would not be a bad idea if we had an excursion to the Wit Deep not only to see this particular process but to inspect the entire surface plant, which is well worth seeing.

Mr. A. Salkinson: Mr. President, I should be very pleased to see you or any other members of the Society there, but it is such a simple thing that you can see it all in about five minutes.

NOTES ON THE ESTIMATION OF CAUSTIC LIME.

(Read at August Meeting, 1907.)

By Edw. H. Croghan (Member).

DISCUSSION.

Mr. E. H. Croghan: Before finally closing the discussion on my paper I wish to state that a copy has been sent to Mr. James Hendrick in Aberdeen, therefore, in view of Mr. Hendrick possibly contributing to the discussion, might I ask that discussion on my paper be kept open?

The President: Yes, certainly.

Mr. E. H. Croghan: There is another matter I wish to mention in consequence of certain queries as to the figures I have obtained for soluble silica. I should therefore like to state the method I employed, so that the process can be discussed, if necessary, and thus place me in a better position to reply to any criticisms. The method was as follows:—

Ten grammes of a sample are evaporated with dilute hydrochloric acid (1 : 2) to dryness on the water bath. The residue is moistened with stronger hydrochloric acid (1 : 1) and the taking to dryness repeated twice. The soluble chlorides obtained are extracted with very dilute hydrochloric acid (1 : 5), the solution heated, filtered off and the insoluble residue well washed. The latter consists of quartz sand, any undecomposed clayey matter, with hydrated silica (if it can possibly exist free after the lime has been burnt) and soluble or combined silica which I have assumed to be taken up by the lime. This insoluble residue is then repeatedly boiled with 5% sodium carbonate solution, until the alkaline solution, filtered hot, indicates that the extraction is complete. This alkaline silicate liquid is acidulated with hydrochloric acid, and evaporated to dryness, etc., as usual. The insoluble residue which I here obtain is the soluble silica which I have stated in my analyses.

NOTES ON FEEDERS, WITH A DESCRIPTION OF A NEW DRIVING DEVICE.

(*Read at August Meeting, 1907.*)

By D. J. Pepler (Member).

DISCUSSION.

Mr. R. G. Bevington: Mr. Pepler, in the early part of his paper, has given us several points which are, of course, apparent even to a tyro in milling. He mentions one point, however, one which I personally have laid stress upon before this Society, namely, that it is highly necessary that the rock be crushed to a reasonable size in the crusher station; there is no doubt whatever that close attention to this point greatly assists in the output of the mill and also obviates a great deal of unnecessary wear and tear upon a feeder of whatsoever kind, caused by oversized pieces of rock jamming in various places on their journey from the bins to the mortar box. I agree with him that the challenge feeder is about the most suitable form at present known, and if well looked after, there is not a great deal of fault to be found with the three-pawl driving device beyond its multiplicity of parts. With regard to the wear of the pawl and socket, which he mentions, and the slipping of the pawl past the centre, some of you will perhaps remember that in the discussion on, I think, Mr. Roskelley's paper I mentioned a pawl made of wrought iron or steel not straight in form as usually sent out with the challenge feeder but with a set in it in this form ⟨ This pawl starts its work very much farther back from the centre than the straight pawl, and it takes a very long time to wear to such an extent, that it is in danger of passing the centre and falling out. If the pawls get worn a bit short, it is but a small matter for the blacksmith to draw them out ⅛ in. or so, as may be required. I have seen Mr. Pepler's device at work, and it is certainly very reliable in its action, but I must agree with Mr. Beaver that there are others much less complicated and also very reliable, and which moreover have the advantage of utilising the old friction plates or brake wheels of the challenge feeder. I was interested on reading a paper given before the Institution of Mining and Metallurgy, London, describing certain mills in Western Australia, to see that the author gave a sketch of a driving device (also utilising the old friction disc with the arm cut off) which he claimed to be an excellent one, and which very closely resembles some devices which are in use upon these fields. The sketch of the device is shown in Fig. I.

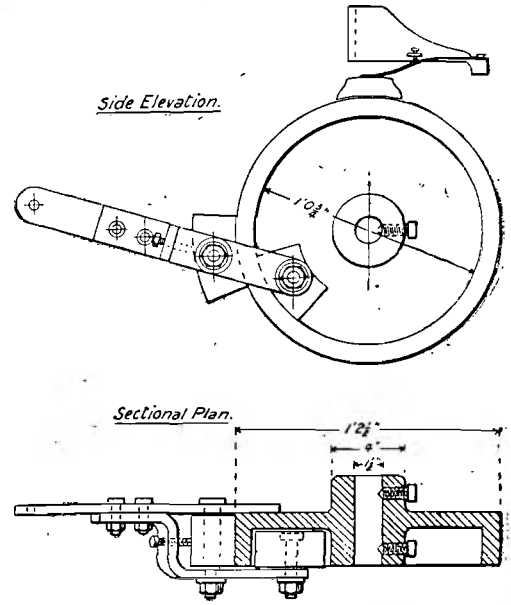

Fig. I.

I may say that I have a very similar device working, which was brought out by one of our Rand mill managers, and find that it works excellently and has required no attention whatever during some six or seven months it has been working, and does not look like wanting any adjustment for a long time yet.

In the discussion upon the above-mentioned paper I see that Mr. W. McDermott, who is one of the highest authorities upon milling matters, mentions a driving device brought out by Mr. Nelson in Western Australia, and which he says is of the simplest possible character, consisting merely of a loose fitting groove in the lever which grips the feed plate (I presume he alludes to what we call the friction disc) by the canting of the lever. No sketch accompanied Mr. McDermott's description, but I have had a driving device made on these lines and find that it works exceedingly well. Anything simpler and less expensive would, I think, be hard to find. I have had one running now for a fortnight and its performance is perfectly satisfactory. I give here a sketch (see Fig. II. on the next page), and should like some of our members to try it.

Mr. G. O. Smart: The drawing given by Mr. Bevington appeals very strongly to me, and I think the device shown is well worth trying. Unfortunately I have no friction discs at the Simmer, as we have not used them for many years, but should I be able to pick up an old disc to suit my feeders I would like to give this drive a

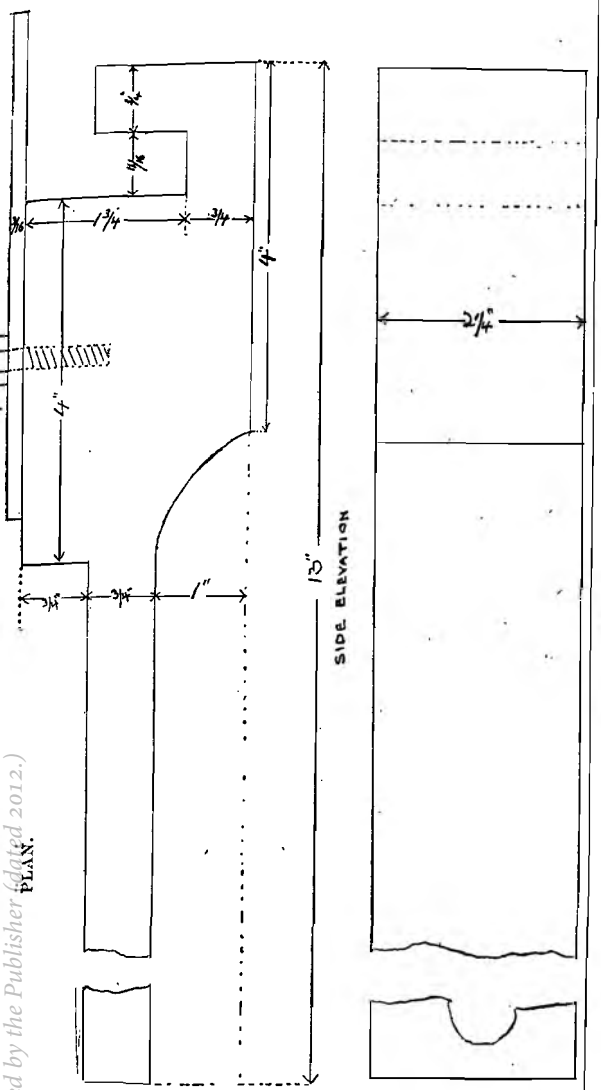

FIG. II.

trial, as it is one of the most simple things we have been shown.

I only propose making a few remarks on that portion of Mr. Pepler's paper dealing with feeders and feeder driving devices, as I think the paper was written principally to bring the author's so-called new driving device, called "Pepler's operative device to challenge feeders" to the notice of this Society. The new driving device is simply another form of the feeder driving gear introduced by me in 1899, to which Mr. Pepler has added some, to my mind, unnecessary complications.

I quite agree with Mr. Pepler that a feeder capable of being adjusted to give a reliable and fine feed is of the utmost importance in a stamp mill. However, like Mr. Beaver, I must take exceptions to the author comparing any modern feeder driving gear with that formerly in use to drive the challenge feeder; as in most up-to-date mills this form of drive has been replaced by one or other of the more modern driving devices now on the market, all of which are more reliable, cost far less for maintenance, and require less attention than the original challenge feeder driving gear. At the same time the original challenge feeder driving device was capable of being adjusted to give a satisfactory feed of ore to the stamps, but required very close attention, and the cost of maintenance was excessive. If Mr. Pepler can save 40% of stem breakages and increase the stamp duty by 8%, to say nothing about the cams and cam shaft breakages which he attributes to the original challenge feeder drive, I can only think that very little attention can have been paid to the old device. I thoroughly agree with Mr. Beaver's remarks on the paper.

Mr. R. G. Bevington: In utilising the old friction disc the arm must be cut off and the face of the disc trimmed with a file. That is quite good enough.

Mr. G. O. Smart: In thinking it over, I believe I can pick up some old friction plates on the Simmer and Jack, so I will try the idea and let you have the results.

THE LABORATORY: ITS ECONOMIC VALUE.

(*Read at October Meeting, 1907.*)

By A. McArthur Johnston, M.A., F.C.S. (Member).

DISCUSSION.

Prof. G. H. Stanley: The author draws attention in this important paper to a very real need of the mining industry, and not only of the mining industry but of every other industry using large quantities of stores and of all sorts of material which are supplied to certain specifications, namely, a laboratory where supplies can be regularly and systematically tested or analysed in order to ascertain whether specifications have been complied with or whether the standard set by samples is maintained. The necessity for this constant examination of material is fully appreciated in other industrial centres of the world, even Great Britain being far less backward in this respect than Mr. Johnston would have us believe, and consequently it is a matter for surprise that on these fields, where almost every other branch of the scientific side of the mining

industry is so well attended to, so little appears to be systematically done in the direction of testing supplies, the laboratory under Mr. Johnston's charge being, I believe, the only one now maintained by any of the mining groups for this purpose.

The examples given of the work of the laboratory should leave no doubt in the mind of any one as to the value, or necessity even, of the work carried on; since buying on a guaranteed basis is the only way of obtaining good and unfiorm quality, and, therefore, of ensuring that the various operations for which the materials are required shall proceed smoothly and under constant conditions. I have already said that Great Britain is not so backward in this direction. The quotation from *Mines and Minerals* would have applied with equal truth to the old country, though one would undoubtedly not have to make very extended search to discover cases where a very different condition of affairs prevailed. I remember one case where a manufacturer, awakening possibly to the fact that supplies were not up to sample, but with somewhat vague ideas as to the qualifications of a suitable person to attend to this department, requested a college to send him a chemist, who could also fill up his time in helping to keep books and who had a knowledge of bricklaying!

Neither do I share Mr. Johnston's assurance regarding the part played in American advances in metallurgy by the research work of its chemists and metallurgists, important undoubtedly as this has been, and still is. It seems to me, however, that their remarkable progress has been chiefly due to their capacity for making workable or greatly extending other people's ideas, possibly unworkable in the original form, and this by reason of the attention paid to the engineering side of the subject; few essentially new processes have been developed in the States, but processes originating elsewhere have been developed and perfected.

This may seem somewhat beside the point, but it has a bearing on another function of a laboratory which Mr. Johnston touches upon, which is, the testing of new ideas in ore treatment, or of new ores by existing methods; it is needless, perhaps, to say that a laboratory equipped only for testing supplies cannot cope with this class of work, though, of course, very small scale tests can be made which may give extremely useful indications to be followed up in another laboratory suitably equipped for the purpose.

This other laboratory must contain such appliances as crushing and grinding machinery, wet concentrating apparatus such as spitzlutten and vanners, furnaces for roasting and melting, leaching vats, electrolytic vats, filter presses, and so on, so that several tons of the ore under examination may be experimented upon, and this, in my opinion, would constitute a true metallurgical laboratory, not mechanical and metallurgical, or mechanical and chemical, as I think Mr. Johnston should have said; just as a "metallurgist" must be a really good engineer, the term being synonymous with "metallurgical engineer."

Even then, absolute duplication of working conditions is impossible, but I entirely agree with him that such a laboratory would work sufficiently closely to actual conditions to justify, or otherwise, the adoption, or large scale testing, of a suggested process or appliance, with far less risk of financial waste than would be involved by trial in the first case on a large working scale.

Such a laboratory, my colleague, Prof. Yates, and myself hope to be able to get together in the new building of the Transvaal University College, and having this in view, I have dealt with the equipment very briefly, because I hope to have more to say on this point at some future date. But I do not mean to imply that I disagree with the author's suggestion *re* the establishment and operation of such a laboratory by the State, or at least by the co-operation of the mining industry. I think there is plenty of room for both, the college laboratory being primarily intended, of course, for the instruction of students in the principles underlying the practice. As an instance of the instructional use of such a plant I may mention that the students at the Royal School of Mines, in using the small plant there, were taught always to coat the battery plate with silver amalgam at starting, and many such points can be brought before students in such a way that they are not likely to be forgotten in future.

With regard to the examination of coals the amount of volatile matter shown by the method described will vary somewhat with the temperature employed and, therefore, in order to get strictly comparable results it is necessary to duplicate the condition of each determination as closely as possible, though probably the procedure followed will give results close enough for the object in view; but with regard to the ash determination, if the crucible is liable to increase its weight by absorption of lead fumes as also is the ash, I should prefer not to use for incinerations or similar purposes, any muffle which is used for cupellation or scorification.

I may mention here, that when connected with coke works I always used to determine ash in a separate quantity of 5 gm. placed in a small scorifier (not a roasting dish, which has a rougher surface); after the first time or so of use the scorifier method gave practically the same result as by porcelain crucibles and the coal burnt off,

much more rapidly owing to such a large surface being exposed to the air; in any case, whether performed in crucibles or scorifiers the coked residue generally took much longer to burn than the original coal, which was rather an important point when 12 to 20 samples per day were being tested. The formula given by Mr. Johnston will only show exactly the percentage of combustible matter extracted if the combustible matter were all of the same kind, *i.e.*, if the volatile hydrocarbons and fixed carbon had the same evaporative factor, but it does show truly the percentage of the total evaporative power which has been developed by burning the coal.

The failure to get a formula for calculating the calorific power from the proximate analysis adds weight to the result of similar failures elsewhere, namely, that it can only be found by actual experiment.

I should like to emphasise Mr. Johnston's remarks with reference to apparatus for measuring high temperatures. Such apparatus is not only a decided gain, but it is in my opinion a necessity. The form I prefer is a thermo-couple provided with a direct reading instrument (a galvanometer), Seger cones are not by any means cheap and can only be used once if they reach a melting temperature, so that such an instrument will soon save its cost, and any number of couples can be used for one reading instrument; the Fery pyrometer does not, I think, give such accurate readings, and cannot, of course, be used in connection with a recording instrument as thermo-couples can, and this is often of importance in an experimental laboratory.

Mr. Johnston is fortunate in possessing an excellent micrographical outfit, and I am sure we all look forward with great interest to the future paper on this subject, which has now become of such great importance; as to the instance given of its use, wrought iron is at once detected under the microscope, but it must have been a bad wrought iron also to stand for so short a time, and it is in respect to these mysterious causes of failure that the microscope plays such an important part, together with the 100-ton testing machine, in the steel works laboratory, the maker usually being, for the sake of his firm's reputation, as anxious to supply as the user is to buy: only material which can be depended upon, he cannot afford to risk the rejection of his material as being not up to specification. Wrought iron is not made on anything like so large a scale as steel, and largely by comparatively small and conservative works, where the testing is not carried out, or, at any rate, is less rigid, so that the quality naturally tends to be variable.

In conclusion, I congratulate the author on giving us a paper which provides so much material for thought, and which cannot fail to be productive of a most interesting and instructive discussion.

Mr. J. H. Harris: I should like to confirm Mr. McArthur Johnston's statement with regard to setting new copper plates with silver amalgam. We adopted this method at the Jumpers Deep in March, 1906, for setting four out of eight plates of our two tube mills. The silver employed was in the form of 774 three penny pieces, weighing about 30 oz. troy; these were rolled out thin and dropped into about a quarter of a bottle of hot mercury (just below vapourising point) to form a paste. This amalgam was then rubbed in in the usual way, and gave perfect satisfaction. The plates have always been in as excellent order as the other four, which were set with gold amalgam.

Mr. W. A. Caldecott (contributed): Considering that several million pounds are spent here every year on the purchase of mining supplies, the subject of Mr. McA. Johnston's important paper, with which he is so well qualified to deal, is worthy of the serious consideration of every one connected with the mining industry. The systematic testing of materials has perhaps reached its highest state of development in the United States, and its foremost exponent may be taken as the Pennsylvania Railroad Company, a colossal corporation operating or controlling over 23,000 miles of track, and with gross earnings amounting to some £60,000,000 yearly.

I was recently privileged to look into the system employed at Altoona by the testing department of this company, whose chief chemist, Dr. C. B. Dudley, is likewise president of the American Society for Testing Materials. Some 25 men are employed on the chemical side alone of the above testing department, and rather more than that number are engaged on mechanical tests and photo-micrographic work.

Detailed specifications, which represent in some cases the labour of years, and in framing which, not only the actual user but the seller is invited to co-operate, are employed in the purchase of all material possible, combined with a complete system of inspection and sampling. These specifications for lubricants, castings, hose, illuminants, paint, soap, cement, and scores of other articles provide that rejected shipments will be returned at the cost of the shipper, but since sellers have in course of time realised that ingenious sophistications will be detected, and that nothing but a good article will pass, the percentage of rejections due to supplies in bulk not equalling samples is exceedingly low.

From time to time, with increased experience, specifications are withdrawn and replaced by

improved forms, and in many cases specifications are accompanied by a detailed description of the method of analysis to be employed. The advantages of such a system to one of the best organised corporations in the world is shown by its development, since its inception, a quarter of a century ago. The first-class manufacturer likewise legitimately profits thereby over his inferior competitor, since bias and the chance influence of a more persuasive advocate are reduced to a minimum.

At the Schenectady works of the well-known General Electric Company, which I was also courteously permitted to visit, a similar system is in vogue, and the head of the large testing department of this company likewise determines what materials shall be employed for each purpose in the manufacture of the company's electrical goods.

At the Woolwich Arsenal, near London, great attention is paid to the regular photo-micrographic examination of the steel used in making big guns, and here as elsewhere this system serves as a means of detecting inferior quality before use, as well as serving to elucidate in great measure the cause of weakness or failure in service.

EXPERIMENTS IN FIRE ASSAYING AT THE REDJANG LEBONG MINE, SUMATRA.

(Read at September Meeting, 1907.)

By G. B. Hogenraad (Associate).

DISCUSSION.

Mr. L. J. Wilmoth: This paper is of great interest to us Rand assayers, as it gives us a glimpse of the assay practice on a mine in a far off field. At a first glance of the analysis submitted it would seem that the ore was complicated, but on a closer inspection it is in reality very simple indeed. The metallic oxides mentioned are present in such small quantities as not to have any prejudicial effect on the accuracy, with exception perhaps of the manganese.

The author is inclined to blame the borax as being the cause of the excessive losses during fusion. No doubt, the upholders of the idea that borax is an "effete superstition" will agree with him, but to me the borax is not the cause of the losses mentioned. If the manganese mentioned in the analyses be present as a dioxide, we have at once a factor inclined to give a heavy slag loss, particularly of the silver. The proportion present is small, but, no doubt, would exert a certain effect in that direction. Considering the effect of the manganese and the high value of the silver contents of the samples, the question arises, as to whether the Reduction Works samples should not be assayed by scorification. Still with an ore of this composition there should be no difficulty in obtaining a satisfactory fusion in a crucible. In his first charge, he relies entirely on his soda as a fluxing agent, as he reduces practically all his litharge to metallic lead. I think that had he altered his proportion of soda and litharge to, say, 1 of soda and 2 of litharge and so made litharge his predominating flux he would have had no trouble from the start. The curious fact stated by him, that the elimination of borax from the flux decreases the silver losses, is surprising, and I regret that I have not any material of the same values to experiment on. It seems to me that the silver losses were due in the first charge, not to the borax in particular but to the general unsuitability of the flux for the charge operated upon.

His advocacy of the abolition of borax from the crucible assay once again raises a point of great interest to us Rand assayers. Several assayers are against its use, although the great majority of us still adhere to it. I have at different times tried a few experiments to prove for my own satisfaction what was the proper course to adopt. I have tried various proportions of soda and litharge, and various proportions of flux to ore, and I have found that a satisfactory fusion can only be obtained with a greatly predominating proportion of litharge present, and, though this may give a fairly satisfactory fusion, it certainly does not give higher results, and the assay is very expensive. With a bulk flux of 1 of soda and 1 of litharge and a proportion of 4 of flux to 1 of ore as advocated by some, the slag is thick and pasty and requires a very high fusion heat to obtain a slag that will pour at all. This heat question is a serious one—in a large office putting through several thousand assays per month. For instance, with 1 A.T. of ore mixed with 4 A.T. flux consisting of 1 part litharge, 1 part soda and $\frac{1}{4}$ part borax I can comfortably fuse 20° F. crucibles in a fire and have them poured within 40 minutes of placing them in the fire, the fuel used being the ordinary Natal coke. Now I find that by using the soda and litharge flux with a proportion of 4 of flux to 1 of ore I have to leave the crucibles nearly half-an-hour longer, and even then there is action still going on in the crucibles. This extra 30 minutes is a serious question, as the Natal coke is inclined to burn away quickly, and has a tendency to fail the assayer at a very critical time if the non-borax flux be used. If I were to adopt—granting the results were as good, which I find they are not—the non-borax flux, I would have to use English coke in my office instead of the Natal coke, which would mean a fair amount of money, when the

Natal coke is between £2 and £3 per ton cheaper than the English.

There is no doubt that a well fused charge of banket ore using borax in the flux yields higher results than with a non-borax flux, due, I have no doubt, to the extra fluidity of the charge.

Mr. Hogenraad mentions that he reduces 34·4 gm. of lead per 1 gm. of charcoal. The amount of lead seems high, as 30 gm. is high for the usual assay charcoal. Perhaps he uses a charcoal fire for his fusions or has forgotten the presence of a small amount of sulphur in his charge.

The cracking of crucibles after a rainy night seems strange, but I fail to see the connection of the large amount of litharge and a cracked crucible unless they were both left out in the rain by accident.

The third charge, which yields such a large button that it needs scorification, can hardly be termed satisfactory, though it might be made so by reducing the amount of charcoal added. The necessity for scorification is a very serious drawback to the success of any charge. That the scorification should have a tendency to yield higher results seems to point to a source of error due to some impurity in the lead button, and this, no doubt, is the selenium originally in the ore. An assay of his cupels would be exceedingly interesting.

In conclusion, I would like to suggest that if he were to adopt a charge similar to those used on the Rand with the exception, perhaps, of a higher proportion of litharge, on account of the selenium present in his ores, he would find his troubles considerably lessened.

Mr. H. A. White: I should like to point out that if Mr. Wilmott will reduce his proportion of flux from 4 to 1 down to 3 to 1 he will find that that extra 30 minutes will also be eliminated.

NOTES ON SMALL STOPE DRILLS.

(Read at October Meeting, 1907.)

By E. M. Weston (Associate).

DISCUSSION.

Mr. E. M. Weston: Since writing the above paper I have noticed two mistakes, which arose from relying on my memory only. The first is that the present type of large Leyner machine does not use an anvil block but strikes the blow direct on to the specially hardened shank of the boring tool. The second is that the stroke of the Gordon drill is from 8 to 8½ in., not 4 in. as stated in my paper, and the hammer is 1¼ in. diameter and is under 2 lb. in weight.

Mr. R. H. Anderson: I have been much interested in Mr. Weston's paper dealing with the various kinds of rock drills and their possible development. Recently I have tried several well-known makes of rock drills under precisely the same conditions, and in my opinion there is little difference in speed of drilling between any of them.

Mr. Weston hits the nail on the head, however, when he says that the fastest boring machine is the most economical. At the same time he only mentions drill steel in a casual way, and does not appear to appreciate the loss in drilling due to imperfect design and dressing of the drill steel. Two years ago Mr. Cameron, of the May Consolidated G. M. Co., suggested to me that the only way of getting over the present troubles was some scheme of detachable bits, and from that time to the present I have been engaged with Messrs. Thos. Firth & Sons, Sheffield, in perfecting the manufacture of the detachable bit that I am at present introducing on these fields. Up to the present I have demonstrated the capabilities of these bits on the following mines:—May Consolidated G. M. Co.; Village Deep G. M. Co.; Wolhuter G. M. Co.; Meyer and Charlton G. M. Co.; Simmer and Jack G. M. Co.; New Primrose G. M. Co.

Using a 3¼ in. Ingersoll on the May Consolidated worked by two Kafirs, we drilled 13 holes in 7 hours 40 minutes, averaging 5 ft. 6 in. deep, or a total of 71½ ft.; 52 bits wers blunted in doing this work. The contractor had two other machines at work in the same stope which drilled 5 holes each in the shift. Had these machines been fitted with my bits a total of 39 holes would have been drilled with ease or 214½ ft., and 156 bits would have been blunted, against 81 ft. as drilled under the present conditions.

Simply regarding my drill as a means of increasing the speed of drilling the increased efficiency is due to the following factors:—

(*a*) No waiting for drill steel.

(*b*) Never using a bit twice.

(*c*) Drills always being of standard lengths.

(*d*) The gauge or diameters being accurate.

(*e*) All bits being interchangeable (that is the starting bit could be fixed to the finishing shank or *vice versa*).

(*f*) The cutting edges being arranged that they always form a round hole.

(*g*) The end faces of the cutting edges form segments of the same circle and are of such a size that they wear evenly and without friction.

(*h*) Ample clearance is allowed.

(*i*) The permanent drill shanks are made much heavier than the present steel, and are capable of

properly delivering the blow without loss of energy due to bending.

(*j*) The combination of an improved arrangement of cutting edges with the increased strength of shank enable holes to be collared at angles which the present steel cannot attempt.

(*k*) Due to the precise gauging of the bits holes can be drilled, starting with a less diameter of bit and finishing larger than with the present steel.

If any one present would care to see my detachable bit at work I would be glad to make arrangements.

The President: I am very glad that Mr. Anderson has brought up this matter of detachable bits, and I regret that he has not with him a few specimens to show us, because there are many here who have not much time to run into town, and it would have been a good opportunity for them to see exactly what the device was like. If Mr. Anderson does not mind I would like a little more information on this subject. In the first place, what is the cost of these bits, and how much time is lost in changing them?

Mr. R. H. Anderson: The cost of the detachable bits is simply a question of quantity. If 10,000 bits were required each day the cost would be quite reasonable:—The time taken to replace a blunt bit varies with the length of the drill, the starter can be replaced in 40 seconds, while the 6 ft. or 7 ft. shank takes 1 minute 30 seconds. The changing of the bits, however, does not interfere with the work of drilling, the starter being changed while the second drill is at work, and so on.

The President: I am afraid I am very inquisitive, but I want further information. You have suggested a drill with a detachable cutting edge. Your idea I suppose is that you renew or retain the sharpness far longer than the ordinary cutting drill. Which do you consider the more important, the stronger shank or the sharper bit?

Mr. R. H. Anderson: The effect of the strong shank is to deliver a heavier blow as the minimum of energy is lost in the give of the shank. This condition naturally causes more wear on the cutting edges. I lay more importance on the arrangement of the cutting edges and especially on the fact of the bit forming a round hole and having correct guiding faces which work without friction in that hole and keep the bit concentric with the axis of the piston rod than on the degree of sharpness retained by the chisel edges. In fact, the drill that has been binding on the side of the hole keeps its edge better than one which has worked freely. I drill much faster than the ordinary drill steel and consequently blunt my edges more.

The President: Perhaps at the next meeting you may be able to exhibit some of the bits?

Mr. R. H. Anderson: Yes.

Mr. H. H. Johnson: I have had the pleasure of seeing the Anderson detachable bit at work, and there is no doubt as to the saving to be made with it. Mr. Anderson seems to have hit the right idea. Whether his scheme will be a commercial success depends upon what price is charged for these bits. But there is no doubt whatever there is a great saving, and a great increase in the efficiency with the use of a stouter drill. There is also a saving in labour. If these bits come into general use it will obviate men using blunt jumpers simply because the sharp ones are too far away.

The President: Cannot you give us a little contribution on stope drills, Mr. Johnson?

Mr. H. H. Johnson: I hope to do so at a later meeting.

Mr. C. H. Wilkins: I would like to point out a serious error in Mr. Weston's paper. In the ordinary type of piston rock drill he calculates the volume of air used as being the volume swept through by the piston for the full stroke. He is probably not aware that air is used expansively in most piston drills. I know of one drill in particular which cuts off at half on the forward and return strokes.

Mr. E. Lawrie: During the last two days I have had the pleasure of being at Mr. Anderson's test at the May Consolidated, and I would like to explain a few points he has not made quite clear. You asked if any time was wasted in detaching the bits. He has two sets of shanks down below and whilst he is using the first the next is made ready with fresh bits. When the first shank has got as far as it can go the second shank is put in, and then a third with a fresh bit. Then he starts another hole with a fresh shank so that no time is wasted. Even with only one set of shanks we can drill without wasting any time, but, of course, it is advisable to have a second set in case of accidents. Then with regard to the difference between a bit with fresh cutting edges and blunt cutting edges, we found that with a blunt bit on a short shank the latter drilled, as near as could be judged, as rapidly as if the bit was a new one, thus substantiating Mr. Anderson's statement that rapidity of drilling is due to the strength of the shank.

The proceedings then closed.

Contributions and Correspondence.

WEAR OF STEEL IN HAND DRILLS.

About two months ago a remark by Mr. Morton, of the Vogelstruis Estate Co., on the considerable wear of steel at the head or hammer end of hand drills, led the writer to have the following test made on the Windsor mine, and the results may be of interest to some of the mining members of the Society.

Fifty drills were cut from the ordinary steel in use on the mine, $\frac{3}{4}''$ octagon of good quality; the heads of 25 were hardened in cold water at the dullest observable red heat, the other 25 were not hardened. The whole 50 were marked, mixed with the drills in use on the mine, and measured after a month's use under ordinary conditions.

Hardened Heads.—

Wear at chisel end, max. $\frac{3}{4}''$, min. $\frac{1}{4}''$, average $\frac{1}{2}''$.
Wear at head end, nil, but a few drills were chipped.

Unhardened Heads.—

Wear at chisel end, max. $\frac{3}{4}''$, min. $\frac{1}{4}''$, average $\frac{1}{2}''$.
Wear at head end, max. $2\frac{1}{2}''$, min. $1''$, average $1\frac{5}{8}''$

It may be added that a single shift only is worked in the mine, and as the ground is easily drilled the chisel ends rarely require more than a re-dressing. It may also be added that the drill boys look on the hardened headed drills with considerable disfavour.

S. H. Ford.

Luipaardsvlei,
October 23, 1907.

THE ELIMINATION OF GOLD BEARING SOLUTION FROM SANDS.

By W. A. Caldecott and A. McA. Johnston.

The practicability of washing sands residues, containing gold in solution, by dropping these through a column of water was experimented on some few months ago by us. Given sufficient depth of water or precipitated cyanide solution, there can be no doubt that a very thorough elimination of the gold solution from the sands can be effected. The following data were obtained, *inter alia*, in these tests :—

The apparatus consisted initially of a top vessel, the container, in which the sands with gold bearing solution were placed, a tube connecting this with an enclosed vessel, the receiver, containing water and into which the sand fell.

1. The upper funnel contained to begin with 1,500 gm. of sands, mixed with 1,000 c.c. gold bearing solution, valued at 3·50 dwt. per ton. The bottom receiver held 1,350 c.c. of water and the $\frac{5}{8}$ in. tube connecting the same is credited with 270 c.c. of water. At the end of $2\frac{1}{2}$ hours all the sand had dropped into the bottom vessel and the solutions were found to assay as follows :—

1,620 c.c. in the top vessel = 1·78 dwt. per ton
270 c.c. in the $\frac{5}{8}$ in. tube = 0·90 dwt. per ton
280 c.c. in the bottom vessel above sand ... ... = 0·77 dwt. per ton
450 c.c. in contact with the sands ... ... = 0·34 dwt. per ton

2. Using a 6 ft. length of tubing to connect the two vessels and a larger receiving vessel, the solution in contact with the sands was brought down even lower.

The tubing measured $\frac{3}{4}$ in. inside, and at the end of $2\frac{1}{2}$ hours when all the sands, 3,062 gm., had been transferred, the solutions assayed as follows :—

2,700 c.c. in the top vessel = 1·02 dwt. per ton
720 c.c. in the $\frac{3}{4}$ in. tube = 0·26 dwt. per ton
1,300 c.c. in the bottom vessel above sands ... = 0·11 dwt. per ton
1,373 c.c. in contact with the sands ... ... = 0·03 dwt. per ton

3. Dropping the sand through a screen fitted into a large cylindrical vessel showed fairly satisfactory results except that the solution other than that in contact with the sands mixed thoroughly. The supernatant solution assayed 1·24 dwt. per ton, whilst that in contact with the sand after washing assayed 0·27 dwt.

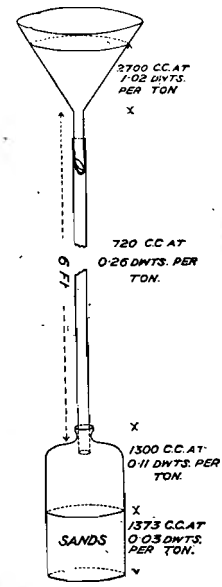

Further experiments in this direction were carried out, but none gave as good results as in Nos. 1 and 2. The objectionable feature was the

failure, as in experiment 3, to obtain layers of gold bearing solution of different values which could have been decanted off to separate storages for treatment. The solution in contact with the sand was generally of comparatively low value. The working of this method of washing sands was demonstrated to members at the meeting, and it was also mentioned there that provisional patent rights had been taken out.

Obituary.

The following deaths are recorded with regret: Mr. HENRY ASHER TILGHMAN (Member), formerly Assistant Consulting Engineer to the Chartered Company, Bulawayo, whose death is reported from California. Mr. Tilghman was elected a member in November, 1904.

Mr. JULES PERRIN (Associate), Assayer of the Mint at Pretoria, under the Republican Government. Mr. Perrin joined the Society in June, 1898.

Notices and Abstracts of Articles and Papers.

CHEMISTRY.

THE DIRECT MEASUREMENT OF OSMOTIC PRESSURE.—"The ordinary direct method of measuring osmotic pressures is to obtain equilibrium on the two sides of the semi-permeable membrane by means of the pressure of a head of liquid. The method devised by the author and Mr. E. G. J. Hartley substitutes mechanical pressure, which is put straight on to the solution, and equilibrium thus obtained. Reversing the usual arrangement, the solution is put outside the semi-permeable tube, in an outer containing tube of gun-metal, and the solvent inside, suitable mechanical arrangements being provided for rendering the joints leak-tight. The pressure is obtained from a plunger worked with a pile of weights and delivered through a mercury U-tube to the solution outside the septum. Equilibrium is obtained or calculated by watching through a telescope the motion of the solvent in a gauge. The measurements may be made at any desired temperature. Corrections are applied for the imperfect semi-permeability of the membrane by analysing the solvent to see if any solution has passed into it.*

A vapour pressure method for measuring osmotic pressure was also described.† This is a modification of the Ostwald and Walker dynamical method. Air is sucked through a train of glass vessels containing first sulphuric acid, to dry it, then through the solution from which it gets saturated up to the vapour pressure of the latter, then the solvent, of which it here takes up more, and finally sulphuric acid again. There are two trains of vessels arranged to oscillate about a central axis, so that the air does not actually bubble through the liquids, which is unsatisfactory, but merely passes over them, small platinum tubes being placed in the tubes to increase the wetted surface. The whole apparatus can be placed in a bath and worked at any desired temperature. Arrhenius' relation modified for concentrated solutions was used for calculating the osmotic pressures from the lowered vapour pressures, and very concordant results were shown to have been obtained between measurements made by the direct-pressure and the vapour-pressure methods. The author is of opinion that the latter method will chiefly have to be relied upon to furnish accurate data for the further study of osmotics.

Both of these methods are described in full in the papers referred to below."—THE EARL OF BERKELEY. —Transactions of the Faraday Society, July, 1907, p. 12. (H. A. W.)

THE LITHARGE METHOD.—"The efficacy of the litharge method depends upon the following facts: 1st, that litharge when melted with sulphides and compounds of the base metals oxidises both the metals and the acid elements with evolution of the volatile oxides (as SO_2, As_2O_3, etc.); 2nd, that molten litharge will dissolve and form easily fusible mixtures with the oxides of metals that are in themselves difficultly fusible; 3rd, that a portion of the litharge is reduced during this oxidation to metallic lead which collects the unoxidised gold and silver.

The slag is very fluid at a moderate heat, and on this account there is a cleaner separation of slag and lead than is the case with other crucible methods. The lead button breaks out soft, clean and bright and need not be hammered at all.

Chemically the method is nearly perfect, practically all ores and metallurgical products being both completely decomposed and fluxed. It reduces cupellation losses by oxidation and subsequent removal by volatilisation or solution in the slag, of those elements which when present in the lead button during cupellation increase cupel-absorption losses, as sulphur, arsenic, antimony, tellurium, copper, zinc, iron, etc. This without previous roasting or the tedious and uncertain recovery of values from matte or speiss sometimes formed in the fusion by the old standard methods. Gold, no matter what its condition in the material treated, is practically completely recovered. Silver requires special precautions to prevent loss of a small percentage. It has been found that a portion of the silver content enters the slag, and is not recovered unless a second precipitation of lead is made after the first lead precipitated has settled. This is accomplished by placing one or more crucibles of coal in the closed muffle with the fusions, and generating gas enough to reduce about 2 gm. of lead after all other action has ceased. The additional recovery of silver (about 2% of silver content) may be due merely to the mechanical collection of suspended metal, but if this were the case, gold should show a similar result. This is not the case, there being no loss of gold as with silver, and the writer believes the loss to be due to oxidation of a portion of the silver.

The separation and slagging of copper is not complete, though more so than with other methods involving only the one separation. It will be noticed that the litharge method depends upon the same principles as scorification and cupellation, as regards elimination of base metals, *i.e.*, the oxidation of the latter and their solution in molten litharge.

From a practical standpoint the litharge method presents only two disadvantages. The cost of fluxes

* See also Trans. Roy. Soc., vol. 106, 1906, p. 481.
† See also Proc. Roy. Soc., vol. 77, 1906, p. 156.

is somewhat higher than for most other methods, but where accuracy is desired this is of slight consequence. The most serious objection to the scheme is the danger to the health of the operator through absorption of lead into the system. Where such large amounts of lead oxides are handled and the air is fouled by the fumes from the fusions, the danger of lead poisoning, always to be guarded against in an assay laboratory, is greatly increased. This subject of lead poisoning among assayers is deserving of more attention than has been given it, and the ventilation of laboratories should be carefully considered, where the litharge method is in use.

In the practical operation of the method only three stock fluxes are needed to treat any material, one for silicious ores, one for basic ores and one for mattes and copper bullion. These may be made up in quantity by the following formulæ.

For silicions ores (over 50% SiO_2) :—

24 lb. litharge.
2 lb. sodium carbonate (Na_2CO_3).
2 lb. potassium carbonate (K_2CO_3).

For basic ores :—

24 lb. litharge.
2 lb. sodium carbonate.
2 lb. potassium carbonate.
3 lb. silica.

For mattes, etc. :—

32 lb. litharge.
1 lb. sodium carbonate.
1 lb. potassium carbonate.
2 lb. silica.

It has been found that the admixture of a small amount of alkaline carbonate and silica improves the slag, reduces corrosion of the crucible and makes a cleaner, more coherent lead button, than does the use of litharge alone; hence they are always used. The silicious ore flux differs from the basic only in the absence of silica, which is furnished by the ore itself in such a case. In the treatment of ores, four or five assay tons of stock flux are placed in a 20 gm. crucible and one-half assay ton of ore added, together with reducing agent (sulphur) or oxidising agent (nitre) as indicated.

After mixing, the charge is covered with a layer of salt, and placed in the muffle at a low red heat, which is gradually raised for about 40 minutes, when the crucibles may be poured.

In the case of material carrying high silver values, to obtain reliable results it is necessary to observe the precautions previously mentioned, *i.e.*, close the muffle tightly, and maintain a reducing atmosphere during the fusion by placing one or more crucibles of bituminous coal in the muffle with the charge. With a gas or gasolene furnace, there is usually a reducing atmosphere in the melting furnace, in which case no coal would be required."—B. M. SNYDER.—*Western Chemist and Metallurgist*, July, 1907, p. 125. (H. A. W.)

VANNING ASSAY OF TIN ORE.—"In dealing with Cornish methods generally, a recent contribution to your correspondence columns specially singled the above out for criticism, alleging that only some 75 per cent. of the tin actually present could be obtained by this method. As this opinion is not uncommonly held in some circles it may be of interest if I furnish some extracts from a paper recently contributed to the *Camborne School of Mines Magazine*, by Ernest Terrell, then assayer at Clitters United, and now manager of the Stormsdown and Owlacombe tin and arsenic mines.

Made up samples were used, the matrix materials having been previously analysed for tin and found pure in that respect.

Sample No. 1, all through 30, none through 120 mesh: Silica, 40 per cent.; iron oxides, 25 per cent.; mispickel, 15 per cent.; iron pyrites 10 per cent.; copper pyrites, 8 per cent.; tin oxide, 2 per cent. Tin oxide recovered by vanning, 1·92 per cent., equivalent to 96 per cent. recovery.

Sample No. 2, all through 150 mesh: Silica, 50 per cent.; mispickel, 10 per cent.; iron oxides, 35 per cent.; copper pyrites, 3 per cent.; tin oxide, 2 per cent. Tin oxide recovered by vanning, 1·887 per cent., equivalent to 94·35 per cent. recovery.

Sample No. 3, all sulphides roasted before vanning: Iron pyrites, 60 per cent; copper pyrites, 15 per cent.; mispickel, 23 per cent.; tin oxide, 2 per cent. Tin oxide recovered by vanning, 1·90 per cent., equivalent to 95 per cent. recovery.

Tests on natural samples were also made with the following results, the chemical assay employed as a check being the hydrogen reduction method:—

TIN OXIDE.

	By Chemical Analysis.	By Vanning.	Recovery.
No. 1 ...	4·26%	4·01%	94·1%
No. 2 ...	0·64%	0·60%	93·7%
No. 3 ...	0·22%	0·20%	90·9%

While the above figures, and others with which I will not trouble you, as they are readily accessible to anyone interested in the question, speak highly for the assay by vanning, there is no doubt that a really rapid, accurate, and easy chemical method is greatly needed. It is not generally known that native tin oxide can be reduced by acting upon it with hydrochloric acid in the presence of zinc (or of magnesium, aluminium, or other high potential metals); but unfortunately the reduction is never complete, some oxide always obstinately resisting attack. I have found that reduction is assisted by allowing the hydrogen evolved to accumulate under pressure, and would suggest further experiment along this line by anyone setting out to solve the problem."—R. T. HANCOCK.—*Engineering and Mining Journal*, July 6, 1907, p. 31. (A. McA. J.)

A NEW METHOD OF DETERMINING AMMONIA.—"The method depends on the fact that, in the presence of a large excess of formaldehyde, ammonium salts form hexamethylenetetramine, liberating the acid quantitatively. *Determination of ammonia in a neutral salt.*—The neutral solution is diluted to 100 c.c. with distilled water, free from carbonic acid, and a few drops of phenolphthalein indicator, and a large excess of 20 per cent. formaldehyde solution (previously neutralised) are added. The free acid is then titrated with $N/10$ sodium hydroxide solution. *Determination of ammonia in presence of free acid.*—Before adding the formaldehyde solution, the liquid must be neutralised, but the presence of ammonium salts renders the end-reaction with phenolphthalein wanting in sharpness, and a suitable indicator must therefore be chosen."—A. RONCHESE, J. Pharm. Chim., 1907, *25*, 611—617.—*Journal of the Society of Chemical Industry*, July 31, 1907, p. 841. (A. W.)

THE QUALITATIVE SEPARATION AND DETECTION OF FERRO-, FERRI- AND SULPHO-CYANIDES.—"The solution to be tested, preferably dilute and about 5 c.c. to 10 c.c. in volume, is acidified faintly with acetic acid or hydrochloric acid and treated with a

soluble thorium salt to complete precipitation. To the liquid with suspended thorium ferrocyanide some finely shredded asbestos is added, the whole is agitated and thrown on a filter, and the precipitate washed with a little water.

The presence of the ferrocyanide may be confirmed by decomposing the washed precipitate with strong sodium hydroxide on the filter, acidifying the clear filtrate with hydrochloric acid, and testing with ferric chloride.

The filtrate from the thorium ferrocyanide is treated with a soluble cadmium salt to complete precipitation of the cadmium ferricyanide, which after the addition of asbestos is filtered and washed as previously described. The presence of the ferricyanide may be confirmed by treating the cadmium ferricyanide with sodium or potassium hydroxide, acidifying the filtered solution, and testing with a ferrous salt.

The filtrate from the cadmium ferricyanide is acidified with hydrochloric acid and treated with ferric chloride, which gives the red ferric sulphocyanide.

The method is especially recommended for the detection of small amounts of ferrocyanides and ferricyanides in the presence of each other. The following table gives some results obtained :—

Tests for $K_4FeC_6N_6$ *only.*

$K_4FeC_6N_6$ present. gm.	$K_3FeC_6N_6$ present. gm.	KSCN present. gm.	Indication.
0·0010	0·1	0·1	Distinct.
0·0005	0·1	0·1	
0·0002	0·1	0·1	
0·0001	0·1	0·1	

Tests for $K_3FeC_6N_6$ *only.*

(These tests were made without waiting to wash the ferrocyanide precipitate thoroughly.)

0·1	0·0010	0·1	Distinct.
0·1	0·0005	0·1	Fairly distinct.
0·1	0·0002	0·1	Faint.
0·1	0·0001	0·1	Very faint.

Tests for KSCN *only.*

0·1	0·1	0·0010	Distinct.
0·1	0·1	0·0005	
0·1	0·1	0·0002	
0·1	0·1	0·0001	

Tests for $K_4FeC_6N_6$, $K_3FeC_6N_6$, *and* KSCN.

0·0100	0·0100	0·0100	Good tests for $K_4FeC_6N_6$, $K_3FeC_6N_6$ and KSCN.
0·0050	0·0050	0·0050	
0·0010	0·0010	0·0010	

Tests of Mixtures Unknown to Analyst.

0·0010	0·0010	—	Found : $K_4FeC_6N_6$ and $K_3FeC_6N_6$.
0·0010	—	0·0010	Found : $K_4FeC_6N_6$ and KSCN.
0·0010	0·0010	0·0010	Fonnd : $K_4FeC_6N_6$, $K_3FeC_6N_6$, and KSCN."

—P. E. Browning and H. E. Palmer, *American Journal of Science*, [4], xxiii., No. 138.—*The Chemical News*, vol. 96, July 5, 1907, p. 7. (A. W.)

Silica Ware.—"The ability to fuse silica into a pure transparent mass has previously been announced in the scientific journals.

Fused silica does not crack on subjection to the most violent and sudden changes of temperature. It is unattacked by the volatile acids, with the exception of hydrofluoric acid. It has a melting point approximately equal to that of platinum. It is harder than ordinary glass. Above 1,000° C. it is permeable to hydrogen and certain other gases. Its coefficient of expansion is 0·00000059 per ° C. (about $\frac{1}{17}$ of that of platinum). Its expansion, up to 1,000° C., is regular ; above 1,200° C. it contracts. As far as is at present known, it shows no tendency to devitrification. Its density is 2·2 (approximately)." —*Engineering and Mining Journal*, July 13, 1907, p. 77. (G.H.S.)

Rhodesian Minerals—Chromite.—The chemical analysis yielded Cr_2O_3, 46·36%, Al_2O_3, 13·18%. Ferrous and ferric oxides (calculated as FeO), 18·66%, NiO + CoO, 0·17% MgO, 13·64%, SiO_2, 4·58%, H_2O, 2·72%. The presence of Pt in traces was also ascertained.

Antimony Ore.—On analysis the following were obtained, Sb, 65·67%, Fe_2O_3, 0·3%. Residue insoluble in acids (chiefly quartz) 7·95%. No gold or silver was found. The ore proved to be stibnite of good quality.—*Bulletin* Imperial Institute, vol. v., 2, 1907, pp. 137—8. (J. A. W.)

Bichloride of Mercury in Nitro-Glycerine Explosives.—The late Dr. Dupré, chemical adviser to the British Government under the Explosives Act, reported that mercuric chloride has a remarkable effect in prolonging or masking the heat test, even when present in extremely small quantities. The effect is due to the metallic mercury derived from the chloride by reducing agents present, such as metallic iron derived from the manufacturing machinery ; and although nitrous fumes are evolved, the mercury volatilises and combines with the iodine liberated by the nitrous fumes, thus preventing the formation of iodide of starch. The addition of bichloride thus raises the heat test without increasing the stability, rather the reverse, and therefore an insufficiently purified explosive may pass the heat test which would otherwise be rejected. Bichloride of mercury being prohibited, however, the value of the heat test is confirmed by experience, and is useful for nitro-glycerine and nitro-cellulose explosives. The usual test for mercury is to submit a small parcel of gold leaf to the vapour evolved at 70° to 80° C. and then test the leaf for mercury. Dr. Dupré does not find this satisfactory and recommends the spectroscopic test instead.—*Engineering and Mining Journal*, August 17, 1907, p. 298. (G. H. S.)

Production of Anhydrous Bromides. — "Reference has already been made in these notes (August 2, 1905) to the ingenious process by which Matignon and Bourrion succeeded in preparing the anhydrous chlorides of practically all the elements having refractory oxides, and the latter investigator has now modified the reaction so as to obtain the corresponding bromides. Most of the electro-positive elements are usually obtained in the form of their oxides, and Bourrion's method consists in heating one of these refractory oxides in a current of hydrogen bromide containing a small amount of sulphur chloride. In this way he has succeeded in converting the oxides of chromium, nickel, cobalt, and many of the rare earths into their anhydrous bromides. The products are thus obtained in a high state of purity, and are often distinctly crystalline. In view of the importance of the anhydrous metallic chlorides and bromides in many synthetical operations, this sulphur chloride process for producing these substances is a noteworthy improvement on the older method of treating the oxide with carbon and chlorine or bromine at fairly high temperatures."—*Times Engineering Supplement*, Sept. 18, 1905. (J. A. W.)

METALLURGY.

THE DETERMINATION OF ANTIMONY IN HARD LEAD.—"Dr. H. Beckman describes in *Zeit f. angew. Chem.*, June 14, 1907, a novel and rapid method for the determination of antimony in hard lead. The method depends on the determination of the melting point of the alloy investigated, taken in connection with the cooling curve of lead antimony alloys.

The analysis is quickly carried out by melting some of the lead in a porcelain crucible, inserting a thermometer, and then waiting for the bath to solidify. The thermometer is made with two sets of graduations, the temperature being marked in black on the left of the capillary, and the corresponding per cent. of antimony being etched in red on the right side. One has only to read the per cent. of antimony corresponding to the position of the quicksilver when the alloy solidifies. The moment of solidification is easily determined, as the metal becomes distinctly viscid, a ring of solidified lead appears on the wall of the crucible, and the thermometer is moved around in the bath with some difficulty. An analysis can easily be carried out in five minutes and the amount of antimony can be determined accurately to the nearest 0·1 per cent.

As a general thing the thermometers are graduated only from 0 to 10 per cent. antimony. There are two percentages of antimony, as for instance 12 and 14 which have the same melting point. This fact, also the fact that with high percentages of antimony it is much more difficult to determine the melting point, makes the method uncertain when antimony in excess of 10 per cent. is present. The difficulty is, however, easily overcome by adding a definite amount of soft lead to the assay in those cases where it is known to be high in antimony, and after determining the percentage in the mixture, calculate the amount in the original sample."—H. BECKMAN. —*Engineering and Mining Journal*, Aug. 10, 1907, p. 262. (G. H. S.)

THE SEPARATION OF TIN OXIDE FROM WOLFRAM. —"The treatment of tin-wolfram ores by a magnetic separator and the extraction of wolfram from tin is now a fairly well-known process, but little has been said about the subsequent treatment of the wolfram.

Since the introduction of magnetic separation for Cornish ores, large quantities of tin oxide have been given away in the parcels of wolfram sold. Thus an analysis of a large parcel of wolfram, as prepared for sale at East Pool Mine, showed that it contained 28% of tin oxide and only 61% of wolfram, the remaining portion consisting of iron oxide, waste and moisture.

The authors have made a number of experiments upon that product of the magnetic separator known to dressers as tinny-wolfram, with the result that a large percentage of the tin can now be extracted. In order to carry out the experiments it was found necessary to devise a method of magnetically treating small quantities of the ore, quickly and without error or loss. To do this an electro-magnet was made.

The ore was passed under the pole of the magnet on a piece of sheet brass $\frac{3}{16}$ in. thick and 9 in. long by $2\frac{1}{2}$ in. wide, the 9in. sides being turned up $\frac{1}{8}$ in. A portion of the sample to be treated was thinly distributed over this brass tray, which was then carefully passed through the air-gap of the magnet in a direction at right angles to the edge of the pole piece. The magnetic particles were drawn up and held to the edge of the pole piece and the non-magnetic particles remained on the tray. On removing the tray a piece of paper was placed under the pole, and the current switched off from the coil, when the magnetic particles were released and dropped on the paper. In this manner quantities of 25 gm. could be readily separated in about 30 min.

A number of 25 gm. quantities of the separated tinny-wolfram were taken in the dry state and separately boiled in the following solutions :—

1. Dilute sodium carbonate (10 gm. of powdered sodium carbonate to 100 c.c. of water).
2. Dilute iron sulphate (10 gm. of commercial iron sulphate crystals to 100 c.c. of water).
3. Dilute sulphuric acid (1 of strong acid to 20 of water).

The results of a second magnetic treatment of similar quantities, after boiling for three hours, was as follows :—

No. 1 yielded 4·8% of tin oxide and waste.
,, 2 ,, 6·7% ,, ,,
,, 3 ,, 32·5% ,, ,,

These experiments showed that the sulphuric acid treatment was in the right direction. The next step was to compare the results obtained by using the common acids, sulphuric, hydrochloric and nitric.

Solutions of one to four were applied in a similar manner to the last set, with these results :—

Sulphuric .....34·5% of tin oxide and waste extracted.
Hydrochloric 29·5% ,, ,, ,,
Nitric .....Very little separation could be made.

These results show that sulphuric acid was the best for the purpose, and further experiments were made with sulphuric acid solutions of different strengths.

Strength of Solution.	Percentage Extracted.
1 in 60	24
1 ,, 40	26
1 ,, 20	32·5
1 ,, 10	33·5

As these figures only showed the effects produced on small quantities (25 gm.) an experiment on a little larger scale was then made—1 cwt. of the ore was placed in a small kieve and covered with a 1 in 20 solution of sulphuric acid. In order to heat this, live steam was injected by means of a piece of india-rubber hose, and the whole was stirred up about every hour. This was continued for five days, the heating only being done during the daytime. Each morning a small quantity was taken out, well washed and dried, and passed under the electro-magnet, the following being the results :—

1st day..... 8·5% of tin could be separated.
2nd ,, ... 10·5% ,, ,, ,,
3rd ,, ... 17·5% ,, ,, ,,
4th ,, ... 20·5% ,, ,, ,,
5th ,, ... 20·75% ,, ,, ,,

As the percentage of tin oxide that could be extracted had stopped increasing, the acid was poured off and the ore thoroughly washed in a tye, dried, and passed through the Wetherill Magnetic Separator, which is used in the first separation of the wolfram from the dressed tin.

This gave :—

20·0% of tin oxide.
73·0% ,, wolfram.
6·5% ,, tinny-wolfram.
0·5% ,, iron oxide.

100·0%

In view of these satisfactory results on a considerable quantity, further experiments are now being carried out with cheaper solvents, and with a view to

perfecting the methods of heating and handling."—AMOS TRELOAR and GURTH JOHNSON.—*Institute of Mining and Metallurgy*, Sept. 19, 1907. (A. R.)

THE BLAISDELL PRESSURE FILTER. — A steel cylinder contains a series of filter leaves, the number of which is varied according to the capacity desired; connections are provided for vacuum and pressure pumps and for slime, water and solution.

The filter leaf consists of a series of non-porous columns provided with drainage grooves, on each side of which is a covering of canvas large enough to overlap the entire frame, and stitched so that no leakage can take place to the interior of the leaf. Charging tanks holding slime, wash water and wash cyanide solution enter into the filter by gravity and receiving tanks below the cylinder take the discharge. In operation the slime from the agitator vats is forced into the pressure cylinder, where the clear solution passes into the filter leaves and out through the discharge pipes to gold-solution tanks for precipitation, the slime remaining as a cake on the outside of the filter leaves. When the cake is about 2 in. thick the flow of pulp is cut off and the surplus remaining in the cylinder is returned to the storage tank. Wash solution is then introduced and forced through the cake, surplus solution being returned to its tank when washing is complete.

While these transfers of liquids are taking place, a partial vacuum is kept within the leaves, so as to make the cake adhere, and when washing is over, air or water under pressure supersedes the vacuum and causes the cake to drop off and be discharged through the bottom of the cylinder.

One of the filter leaves is supported by a weighing device, which shows the progress of formation of the cake, and an indicator connects with an electric bell when the proper thickness is reached. Seven different sizes of filter are constructed, with rated capacities varying from 12 to 500 tons of dry slime per 24 hours."—*Engineering and Mining Journal*, Sept. 7, 1907, p. 446. (G. H. S.)

ELECTRO-CHEMICAL AND METAL INDUSTRIES IN THE SOUTH OF FRANCE.—"The electro-chemical and metal industries have continued to make progress in 1906, which has seen an addition of some 5,000 h.p. for the production of aluminium and the same increase for carbide of calcium. These increases have been obtained by the completion of existing hydraulic works, but the present year (1907) will see the harnessing of further falls in the service of these industries not only in the Alps, but also in the Pyrenees. The use of what is fantastically called 'white coal' has attained a remarkable development in South-Eastern France within the last few years.

Aluminium.—The water-power used for the various chemical industries in 1906 amounted in the aggregate to 100,000 h.p., which may be distributed as follows:—

	Horse-power.
Aluminium	35,000
Carbide of calcium	25,000
Chlorate of potassium or sodium ...	15,000
Metallurgic products, steel	22,000
Soda, chlorine ... ... } Hypochlorites ... ... }	1,000
Various	2,000
Total	100,000

The success of the 'Société Grenobloise de Force et Lumière' in bringing water-power 112 miles from Moutiers to Lyons has given birth to a scheme for bringing many thousands of horse-power from Bellegarde (Ain), on the Rhône, to Paris.

The production of aluminium has made rapid strides of late, having risen from 1,647 metric tons in 1904 to 1,905 metric tons in 1905, and though the actual figures of production for 1906 are not yet accessible, the export alone increased by over 50 per cent. as compared with the previous year; so that it is certain that the rate of progression in production was at least maintained. The extraction of bauxite, the raw material of aluminium, has also risen from 75,000 metric tons in 1905 to 103,000 metric tons in 1906. A large part, however, of the quarried bauxite is of no use for the manufacture of aluminium, and is employed for making fireproof ware.

Nitrates.—The production of nitrates is about to be revolutionised by the manufacture of cyanamide and nitric acid in an electric furnace. Cyanamide is obtained by the action of nitrogen upon carbide of calcium at the temperature of the electric furnace. This substance turns in the soil into salts of ammonia, and can thus enter into competition with the sulphates of ammonia produced in gas and sewage works. A factory for cyanamide is being established in the district of the Tarentaise.

The production of nitric acid in the electric furnace by the direct union of oxygen, nitrogen, and steam is carried on in a Norwegian factory. The nitric acid, neutralised by lime, gives solid nitrate of lime, which may be advantageously used instead of nitrate of soda for agricultural purposes. When the fact is borne in mind that France alone imported 241,272 metric tons of nitrate of soda in 1906, it is clear that if only the nett cost can be kept sufficiently low, this new industry has a great future before it. So far, only samples of cyanamide and nitrate of lime have reached France, but it is announced that important works are being organised in Germany and Italy for the production of cyanamide, and in Norway for nitrate of lime."—MR. CONSUL VICARS, "Report for 1906."—*London Mining Journal*, Sept. 21, 1907, p. 374. (A. R.)

THE USES OF BAUXITE.—"Bauxite has proved to be of great value as a basic refractory material in that it resists well the scouring action of metallic oxides in the furnace. Bauxite is used most conveniently in the form of bricks for this purpose. The Berger patent covers a process for making these bricks. Natural high-alumina low-silica bauxite from Arkansas is used, bound by a small percentage of plastic fireclay, sodium silicate, or lime. The bricks contain from 88 to 90 per cent. of alumina and from 10 to 12 per cent. of ferric oxide, silica, and titanic acid. The percentage of silica can be reduced to 6 or 8 per cent. by the use of a bond free from silica, so that the brick is not appreciably detrimental to basicity. Bauxite brick seems to be especially adapted for the linings of basic open-hearth steel furnaces. The highest grade is used in the floor and walls up to the slag line, protected by a bed of calcined bauxite. Above the slag line cheaper brick with a lower percentage of bauxite can be used.

A severe test was made some time ago at one of the basic open-hearth furnaces of the Bethlehem Steel Works, in which a bauxite brick and a magnesite brick were placed side by side near the gas and air ports, and thus were subjected to the highest temperature attainable in the furnace. The magnesite brick bent and showed viscosity after seven minutes, against fifteen minutes for the bauxite brick. A bauxite brick and a magnesite brick were then submerged in slag near the doors for some time, after

which they were withdrawn and examined when cold. The magnesite brick was incorporated with slag, while the bauxite brick, when broken, showed that the slag had not penetrated to its centre, but had remained as a coating over the outside.

In addition to its use for open hearths, bauxite brick has proved successful for other uses, two of which are as a lining for rotary Portland cement kilns and as a lining for lead-refining furnaces. Used as a lining for the hot zone (10 to 12 ft.) of a 60-ft. rotary cement kiln, 6 in. bauxite bricks have been found to give more than ten months' continuous night and day service. This indicates that the material is superior to fire brick, and that the saving of output that would otherwise be lost during frequent shut-downs for the purpose of relining or patching a kiln in the hot zone will more than compensate for the increased cost of superior lining.

In lead-refining it has been found that the scum composed of highly basic oxides readily attacks the free silica and silicates of alumina in a fire brick and rapidly decomposes the latter, whereas the basic bauxite lining, theoretically and in practice, is better adapted for use in such furnaces. Tests show that bauxite brick really lasts five or six times as long as the fire brick lining.

Bauxite bricks are manufactured by the Laclede Fire Brick Company, of St. Louis, for the American Bauxite Company, and their cost is considerably less than that of magnesite brick.

It is noteworthy that the attention of the public was first called to the Arkansas bauxite deposits in 1891 by Dr. J. C. Branner, then State Geologist of Arkansas. In 1895 their commercial value began to be appreciated. In 1899 were reported the first statistics of production from this field, and reference to the table will show that the production of 1906 has exceeded the most sanguine predictions."—ERNEST F. BURCHARD, "Mineral Resources of the United States."—*London Mining Journal*, Sept. 21, 1907, p. 273. (A. R.)

THE NEW ALLOYS.—"During the last three or four years a great number of new metallic alloys, with very varied properties, have appeared upon the market, amongst which we shall select the most important, and give their composition.

Cupro-Magnesium (Cu = 90, Mg = 10) is utilised as a deoxidising agent for unrefined copper, in the proportion of 1%. The copper thus obtained has an electric conductivity less than that given by silicium for deoxidising, but deoxidisation is very easy by mere fusion, and very economical.

Phono - Electric Wires (Cu = 98·55, Sn = 1·40, Si = 0·05) are employed for telephones and trolleys. They withstand the effects of traction much better than pure copper, though their electric conductivity is only two-fifths that of pure copper. In preparing this alloy silicium is totally sacrificed. Consequently it does not exist beyond traces in the alloy.

Sterline (Cu = 68·52, Zn = 12·84, Ni = 17·88, Fe = 0·76) is a kind of white metal; a substitute for silver.

Manganese Resistance Metal (Cu = 85, Fe = 3, Mn = 12) is a substitute for German silver, especially for resistance boxes for electric measurements; specific electric resistance is only 3-100ths to 4·5-100ths that of copper.

Manganine (Cu = 82·12, Ni = 2·29, Fe = 0·57, Mn = 15·02) is also utilised for resistance boxes, and owes to the presence of nickel a very high fusion point and extremely low coefficient of temperature.

Acid Proof Metal (Cu = 82, Zn = 2, Sn = 8, Pb = 8) is particularly useful for paper works where the bisulphite process is employed for manufacture of pulp. As a matter of fact, it is only proof against weak or diluted strong acids, except nitric, which quickly attacks it.

Victor Metal (Cu = 49·94, Zn = 34·27, Ni = 15·40, Al = 0·11, Fe = 0·28) is whiter than German silver, which it can often replace, though less easy to work. It perfectly withstands the effect of salt water and air. Consequently it is chiefly utilised for marine engines.

Aluminium Silver (Cu = 57, Zn = 20, Ni = 20, Al = 3) is a white, very tenacious metal, which remains bright in air, and advantageously replaces steel whenever there is danger of rust.

Tempered Lead (Pb = 98·51, Sb = 0·11, Sn = 0·08, Na = 1·3) is manufactured by placing small fragments of sodium in the molten metal. This alloy is not so soft as lead, and can be rolled into thin sheets without tearing. When percentage of sodium is rather great, tarnishing is prevented by coating the metal with paraffin. Thus formation of soda is prevented, owing to oxidation of the excess of sodium by atmospheric oxygen. For this reason it is valued for manufacture of shaft bearings, because the soda formed, as the bearings wear away, saponifies the lubricant and produces a soap which acts even better than the oil.

Alkali Proof Metal is iron with 5% to 10% nickel. All alloys containing zinc, tin, lead, aluminium, antimony, or silicium are readily attacked by caustic alkalies."—*La Nature.—London Mining Journal*, Sept. 21, 1907, p. 361. (A. R.)

INFLUENCE OF IRON IN COPPER ELECTROLYSIS.—"The influences of iron in copper electrolysis may be summed up as follows:—

1. High percentages of iron in the ferric condition materially retard copper deposition. Ferrous salts have little or no effect.

2. The effect of the electric current in the usual solution is to reduce ferric salts to ferrous. This reduction must proceed to a certain point before all the copper will remain on the cathode. This point is about the same whatever be the iron and copper percentages, but it varies some as the solution is circulated or stationary.

3. Rapid circulation of the solution by a stirrer permits the use of high current densities without sponging, thereby making deposition faster. The current also is more efficient for both depositing copper and reducing iron."—E. L. LARISON.—*Engineering and Mining Journal*, Sept, 7, 1907, p. 442. (G. H. S.)

VALUES IN GOLD SLUDGE DUST.—"A few particulars concerning the working of a device for saving values lost by dusting during the preparation of zinc-box precipitates for smelting are given by the *Journal of Mines of Western Australia*, June 29, 1907. A hood, suction fan and mechanical dust-collector system was installed in the clean-up room at the Great Boulder Perseverance mine at a cost of $300 and subsequently operated as required during the period from Oct. 1, 1906, to June 8, 1907. All screening and mixing of sludges was done under a pyramidal-shaped hood, fitted with side curtains reaching to within a few inches of the floor level. By means of the fan the dust was drawn upward, sucked away through an opening in the top of the hood, and delivered to the dust collector, from which the recovered material was removed at the end of the period indicated. The quantity of dust recovered was 16·3 lb., containing 29·756 oz. of fine gold, valued at $615. The total

weight of sludge handled during the eight months' period was 20,784 lb., and from this 46,790 oz. of fine gold were recovered by smelting. The recovery of gold from the dust, though insignificant when compared with the total values handled, justified the cost of installation of the system."—*Engineering and Mining Journal*, Sept. 7, 1907, p. 443. (G. H. S.)

MINING.

EIGHT HOURS' DAY.—"The final report of the Departmental Committee, appointed to enquire into the probable economic effect of a limit of eight hours to the working day of coal miners, will be read with interest both by those who view the question from the economical standpoint, and those whose concern with it is mainly of a social character. The present duration of the working day varies greatly with different districts, but the examination of statistics shows that, making allowance for customary weekly or fortnightly total stop days and short days, the average theoretical full week's work amounts to seven minutes short of 50 hours. Assuming the continuance of the short and idle days undiminished, a legal eight hours' day would effect a further reduction of 10·27 per cent, and it is obviously an easy task to calculate the diminution in output which, with constant labour efficiency, this would entail. There are, however, compensations which would to a large extent neutralise any such reduction. Owing to stoppages at the collieries for various reasons, the actual falls short of the theoretical working week by more than six hours, and it is believed that under a legally restricted eight-hour day a portion of this time would be utilised. Further factors of adjustment would be an improvement in the efficiency of the labour, more especially in districts now working beyond the average time, and an extension of the use of labour-saving machinery. Although expressed in guarded language, the opinion of the Committee seems to be that while an eight hours' day would occasion some reduction in production, its extent would fall substantially short of the theoretical maximum. As to the permanent results of a legally restricted day for workers in coal mines upon wages and employment, these are stated to be 'impossible to see,' and 'imprudent to forecast.'"—*London Mining Journal*, Aug. 31, 1907, p. 277. (J. Y.)

RESCUE APPARATUS FOR USE IN COAL MINES.—"Refuge chambers have been suggested from time to time, to be built in different parts of the mine, the chambers being closed against the noxious gases present in the mines, after the men have entered them, and being supplied with air and milk, etc., for sustenance from the surface, but not much appears yet to have been done in that direction. The difficulties in the way of the establishment of refuge chambers are very great. A large number of them would be necessary for large mines, such as rule at the present day, and the constant 'working' of the mine would necessitate a somewhat heavy outlay to keep them in order.

Apparatus, however, that can be used by the rescue parties are far more practical. The great difficulties which rescue parties have to encounter, are the poisonous atmosphere resulting from conversion of a large portion of the oxygen of the atmosphere of the mine, into carbonic acid, and carbonic oxide, and the fact that the explosion very often seriously damages the roadways. With the rescue apparatus described, however, a great deal may be, and has been done, to enable explorers to penetrate into even very poisonous atmospheres. At one of the meetings of the Institute of Mining Engineers last year, two apparatus were described, one by Herr G. A. Meyer, of Westphalia, whose apparatus and whose corps of trained men had been employed in the rescue work, after the unfortunate disaster at the Courrières, the other by Mr. W. E. Garforth, the Chairman of Messrs. Pope & Pearsons, a large firm of colliery owners in Yorkshire.

The principle upon which both apparatus, and, in fact, all apparatus designed for the purpose, are arranged, is the provision of a supply of fresh oxygen to the lungs of the explorer, and the carrying off and re-oxygenation of the air that he exhales at each respiration. Both apparatus include a supply of oxygen and a supply of a substance that will absorb the carbonic acid, and allow the air that has been expired to be used over again. There are several difficulties in the working out of an appliance of this kind. One is the weight of the apparatus which has to be carried, containing the oxygen and the absorbent of carbonic acid, and another is the prevention of the polluted air of the roadway in which the explorer is moving, reaching the lungs. In Herr Meyer's apparatus the supply of oxygen compressed to 1,764 lb. per sq. in., is carried in two flasks on the back of the explorer, together with a pressure gauge. On his breast the explorer carries an india-rubber bag, with a second smaller india-rubber bag inside it, the latter containing the absorbent. In the lower part of the large india-rubber bag is also carried an absorbent for moisture. The absorbent of carbonic acid in Herr Meyer's apparatus is caustic potash, 1 kgm., or 2·2 lb., being carried, this being stated to be sufficient for two hours' work. A safety or relief valve is also fixed on the apparatus, to guard against the possibility of the pressure of oxygen in front of the mouth, being too great for the breath to expire properly, and therefore to an accumulation of carbonic acid being formed in the lungs, leading to asphyxiation. A tube enters the mouth, and the nostrils are plugged with cotton wool, soaked in a special kind of grease. The oxygen is supplied to the lungs through a reducing valve, and the expired breath is made to draw in a mixture of oxygen and regenerated air from the absorbing apparatus, by the application of the injector principle. An electric bell, ringing every five minutes, warns the explorer when half the oxygen has been consumed, so that he may at once commence his retreat. In Mr. Garforth's apparatus, two cylinders of oxygen are also carried, one under each arm, the oxygen being compressed to 1,800 lb. per sq. in., and the bottles being rounded to the shape of the body, so as to be carried conveniently. The absorbent, which is also caustic potash, is carried in a bag on the back. The mouth and eyes are protected by a conical shaped vessel fitting over them, arranged so, that the moisture from the breath does not accumulate on the eye pieces, and breathing can take place from both mouth and nostrils. A helmet completes the apparatus in both Herr Meyer's and Mr. Garforth's arrangement, and the expired air, in both forms of apparatus, passes from the mouth through the absorber, where it is deprived of its carbonic acid, and then returns to the mouth, taking up a small portion of oxygen from the reservoir, on its way.

In Mr. Garforth's apparatus the supply of oxygen is controlled automatically by a reducing valve, worked by the lungs themselves. The quantity of oxygen required was found, by actual experiments, to vary very considerably when at rest and when at work. From experiments carried out in the gallery at Altoft's colliery (Messrs. Pope and Pearsons),

with Herr Meyer's and other apparatus, men were able to remain in the colliery for 1 hour and 40 minutes when not exerting themselves, but only from 15 to 20 minutes during exertion, such as would be required in the act of exploring, climbing over falls, through air passages, and so on. Mr. Garforth also found, from the experiments, that if the supply of oxygen was the same, whether a man was exerting himself or not, very unpleasant feelings were produced, in some cases vomiting taking place, and hence he came to the conclusion that it was absolutely necessary that the quantity of oxygen taken in should be in proportion to the work done. Further, he came to the conclusion that the explorer should have both hands free, and that neither hand should be engaged in regulating a valve controlling the supply of oxygen. In his latest apparatus he provides a linen jacket, weighing 2 lb., buttoning close up to the throat, the pipes from the oxygen cylinders passing through slits in the jacket, up to the mouth-piece apparatus, and he has an electric lamp with a small accumulator and a flexible cord, arranged so that the explorer can either hook the lamp through one of the button holes of the jacket, or carry it in his hand. The whole of the apparatus, including the linen jacket, weighs about 30 lb., distributed over the head, shoulders and hips. It can all be put on and taken off without assistance, the oxygen cylinders being carried in the side-pockets of the jackets, and warning being given to the explorer when one cylinder is exhausted, so that he can at once commence his retreat. Some interesting analyses are given by Mr. Garforth, of the gases in his rescue apparatus, the analyses having been confirmed by Dr. Haldane, who has done so much in the matter of the sanitation of underground workings. The following is one analysis :—

	Oxygen. Per cent.	Carbonic Acid. Per cent.	Nitrogen. Per cent.
In the mouth-piece ...	17·9.	3·38.	78·72.
Just before passing through the absorber ...	16·0.	3·4.	80·6.
In the bag or receiver before entering the mouth-piece	19·0.	0·03.	80·97.

It will be seen that the carbonic acid in the expired air from the lungs, is entirely absorbed by the potash, but that the percentage of oxygen is slightly less after passing through the absorber than that in atmospheric air, the difference being made up from the oxygen supply in the cylinders.

Several tests were made in the gallery at Altoft's colliery, in which coal miners and colliery officials remained in a noxious atmosphere for several hours together, in the latest experiment a miner having remained there for six hours.

There appears to be a difference of opinion as to the matter of the supply of oxygen. On the Continent it appears to be held that there is no harm in having an excessive supply, that the lungs will only take in what they require. Mr. Garforth's experiments, it will be seen, negative this conclusion. There appears, however, to be no difference of opinion as to the effect of an excess of carbonic acid and an absence of oxygen. Breathing becomes unpleasant when 4 per cent. of carbonic acid is present in the atmosphere, it is difficult at 6 per cent., and at 10 per cent. asphyxiation commences. No amount of excess of oxygen will neutralise the excess of carbonic acid. With insufficient oxygen breathing is unpleasant with only 12 per cent., and is very difficult at 6 per cent.

One important point should be noticed, that is mentioned by Mr. Garforth. The oxygen in the cylinders should be absolutely pure. It has been stated by Dr. Haldane, that cylinders of oxygen sometimes contain as much as 10 per cent. of nitrogen, and this may lead to the asphyxiation of the explorers."—*Indian and Eastern Engineer*, August, 1907, p. 53. (A. R.)

THE DESIGN AND EQUIPMENT OF SHAFTS FOR DEEP WINDING.—"During the last decade the subject of deep mining has been brought prominently before the mining engineers of the country owing to the rapid exhaustion of the seams which have hitherto been worked at moderately shallow depths, and shafts are now being sunk and seams opened out at depths which are very much greater than had to be dealt with a few years ago.

At one or two of the older collieries the lower seams have been opened out as the upper seams have been exhausted, and the best has been made of the existing plant and machinery; and although coal has been, and is, worked at great depths under those conditions—and, no doubt, with satisfactory results—it nevertheless follows that there is great scope for methods being adopted for the winning and working of seams at 800 yards in depth and over. I take 800 yards as an illustrative figure, as I am of opinion that any shaft for the purpose of working coal below that depth may be considered a deep one.

There are so many and varied factors to be taken into consideration that it is almost impossible to deal with them except in a very general way.

First, size of shaft. If a large acreage of coal has to be worked, it is of advantage to have the shafts as large as possible; first, in order to give the utmost possible scope for a maximum quantity of air being circulated through the mines, as the greater the depth the more necessary it is for such air being divided into splits, with the object of cooling down the various sections of the workings to the utmost extent; and secondly, large shafts enable cages of larger size to be introduced, and the number of tubs raised at one time to be appreciably increased, although with the appliances that are now available for simultaneous decking the question of the size of the cages is not all-important.

In deciding upon the size of the shafts, the character of the strata to be sunk through is an important factor; if it should be such as to preclude the sinking of the pits by normal methods and compel the introduction of sinking by tubing being forced down by hydraulic pressure in order to deal with running sand and water, or other difficulties, then the size of the shaft is limited. I am personally of opinion that large shafts are of advantage in dealing with a large quantity of coal, and I have recently put down at a depth of 760 yards shafts 23 ft. in diameter, and a number during the last 20 years all over 18 ft. diameter.

It is convenient here to mention the question of guides. These can be either rigid steel guides or rope guides. I have rope guides working perfectly satisfactorily in pits over 900 yards deep.

The question of the type of engine to be adopted, and especially the drum, affords a wide field for ingenuity. High pressure steam-engines seem to me to be best adapted for coping with the problem before us, and with the introduction of low pressure turbines, which afford a means of utilising the exhaust steam, they present such advantages in the way of simplicity that I think they will prove themselves superior to compound engines.

The next question is the drum. A parallel drum with a balance-rope works economically, but the depth at which it can be used is limited, owing to the impossibility of getting a satisfactory lead for the rope off the drum on to the pulley when large ropes and great depths have to be dealt with. Several methods have been adopted for overcoming this difficulty, namely :—

The Koepe system.
The conical drum.
The flat rope drum.
The modified conical drum and balance-rope.

Winding-ropes to raise a load of 15 to 20 tons have to be very large. At the present time for a depth of 760 yards I have a locked coil rope 5½ in. in circumference raising a load of 15 tons, the weight of the rope itself being 9 tons.

If the shaft is deepened, the question of the size of the rope, if the same load has to be raised, is a matter of considerable difficulty, especially if a ten to one margin between the working-load and the breaking-strain is adhered to.

I have considered the desirability, where the size of the shafts would allow it, of having four cages in a shaft and two sets of winding-engines, each raising half the load that I have spoken of, so as to keep the size and weight of the rope within reasonable limits.

The late Mr. David Davy, of Sheffield, was at work on a scheme at the time of his death for winding by means of an endless chain, hanging on the tubs one at a time by means of cages which formed part of the chain itself. It was a very ingenious arrangement, but as to its practicability I should not like to express an opinion.

The next point is the question of ventilation, and, as I have said at the commencement of this Note, a *maximum volume* of air is all-important, so as to afford fac lities for dividing the air into a number of splits, each split dealing with its own separate area of working-faces, the collieries being laid out as far as practicable in independent sections. This is the only method by which the working-places at, say, depths of 1,200 yards can be kept so as to enable men to work with reasonable comfort. The question of ventilation may not be actually within the four corners of the subject I am asked to bring before you, but in deciding upon the size of the shafts it has to be taken into account, and therefore I mention it." — CHARLES EDWARD RHODES. — *Indian and Eastern Engineer*, Sept., 1907, p. 106. (A. R.)

SINKING OPERATIONS THROUGH QUICKSAND.—"The work done in sinking Bentley Colliery was described in some detail, particular attention being paid to the method adopted in sinking through the 50 ft. of quicksand, which was met with near the surface in the case of both pits. This was to lower cast iron tubbing bolted together with steel piles, grooved and tongued into each other, forming a complete circle round the outside of the bottom ring and sliding on the back. The piles were pushed downward by pressure applied against the bottom flange of the bottom ring. The tubbing was then lowered down, sliding inside the piles, and additional rings of tubbing were added at the top. The tubbing was supported at the top by screws with cast steel shoes bolted to the top ring, the shoes being attached to vertical girders built into the sides of a cement concrete block, 6 ft. thick, 50 ft. square, and with a hole 23 ft. in diameter in the centre. The tubbing, 20 ft. in inside diameter, 6 in. wide on the bed, and 1 in. thick was fitted with inside flanges and bolted together with bolts ⅞ in. in diameter. The piles were built of mild steel plates 1¼ in. thick and 8 ft. long, grooved and tongued into each other with a T iron, the whole being bolted together with counter-sunk bolts, and a bolt was inserted through a T slot in the centre to keep the piles close to the back of the tubbing. Ninety-six piles formed a complete circle, fitting closely against the tubbing. The segments of tubbing were made 1 ft. 9 in. deep, 8½ in. wide on the bed and 1½ in. thick, and bolted together with sheeting ⅜ in. thick between each joint. There were 12 segments in each ring, and each ring was stayed diagonally with four tie rods 1¼ in. in diameter. The strong cast iron guide ring fitted inside the piles below the tubbing, and ring of tubbing built upon the guide ring, were lifted by hydraulic jacks and bolted to the lowest ring of the tubbing. The guide ring weighed 17 tons, the piles one ton each, and a ring of tubbing 8¾ tons.

The President asked whether there were local conditions which prevented the adoption of the freezing process for sinking. He would like to have a comparison of the cost of sinking by the freezing process and by that which had been successfully adopted. Mr. J. W. Fryar, in his reply, said he had worked out the cost of the method adopted as compared with the ordinary method, and it had cost about £12,000 more to sink the two shafts through the quicksand than if the usual method had been adopted, but this included the cost of failures that occurred at the first shaft, and, therefore, was not exactly a fair comparison."—J. W. FRYAR and ROBT. CLIVE, *Times Engineering Supplement*, Sept. 11, 1907.—Conference, Institute of Mining Engineers, Sept. 4, 1907. (J.A.W.)

RAPIDITY OF THE DETONATION OF EXPLOSIVES.—"In a communication to the 'Académie des Sciences' M. Dautriche records the results of experiments in regard to the rapidity of the detonation of explosives. He finds that the velocity is a function of the density of the explosive, at first increasing up to a certain density △ ft., and then decreasing. The 'sensibility' of the explosive, defined by the weight of fulminate of the detonator necessary to detonate a cartridge, is sensibly constant in the ascending part of the velocity-density curve; it decreases rapidly, on the contrary, in the descending portion of the curve, so that for higher densities than △ ft. it is necessary to increase the detonating charge in order to avoid misfires. The *brisance* (shattering effect) of the explosive, measured by the lead block test, has no absolute relation to the velocity of detonation, so that the lead block test gives results almost independent of density, that is to say the velocity of detonation. M. Dautriche has also measured the velocity of the shocks communicated to the air by the detonation of explosive cartridges, and has found that these velocities reach up to nine times the velocity of sound." — M. DAUTRICHE. — *Indian Engineering*, Sept. 7, 1907, p. 155. (A. R.)

ROOF WEIGHTS IN MINES.—"The author pointed out that in underground mining the nature of the roof determined to a large extent the method of working to be adopted, and as seams were worked under widely different roof conditions, the support and control of the roof in mines opened a wide field for careful observation. Of the many conditions requisite for success in longwall working, that of obtaining a uniform settling of the roof behind the working face was one of the most important, for when the desired result was attained the bending roof became a lever which assisted materially in the work of coal getting. Roof weights might be divided

into three classes, the first weight, limited to the working face; the second weight, the goaf weight following the working face; and the third weight, the general subsidence of the strata. Although the first weight was mainly due to the weight of the subsiding roof, there were other influences at work, one of which was the lateral compression of the strata, which accounted for side weight in the roads, and also for the fact that the working in an upper seam disturbed the roads previously made in a lower seam. Dealing with the second weight, he pointed out that as the coal face advanced the roof bent in the goaf due to the first weight, but the effect of the second weight was mainly seen in the crushed packs and reduced height of the roads, necessitating their re-ripping or re-dinting. During the period of second weight the roof should be allowed to settle on the packs as uniformly as possible. Wood packs put in the gate sides and middle props in the roads should be avoided, as they tended to break and cut the roof. When the coal face was abandoned the second weight advanced towards the face until it practically reached it. The conditions during the period of second weight were the reverse of those for first weight. The advancing line of settled goaf formed the fulcrum of the roof lever, and the power was applied by the weight of the higher strata subsiding towards the retreating coal face." — H. T. FOSTER, *Times Engineering Supplement*, Sept. 11, 1907.—Conference of Institute of Mining Engineers, Sept. 4, 1907. (J. A. W.)

DEEP LEVEL TEMPERATURE AND VENTILATION.—"Readings taken in the New Chum and Victoria mine, Bendigo, by Mr. A. H. Merrin and Mr. W. Abraham, show that at 3,357 ft., or the bottom plat, the thermometer registered 78½°, while the aerometer showed that 1,360 cub. ft. of air was passing down the shaft per minute. The air is returned through a fourth compartment, which also allows of blasting fumes being readily taken away. In a centre-country winze below 3,357 ft., at 160 ft. from the shaft, the temperature was 79½°, while the air registration was 1,400 cub. ft. per minute. The temperature at a depth of 2,200 ft. was 75°, and the volume of air 5,100 ft. per minute."—*Colliery Guardian*, Sept. 3, 1907, p. 495. (A. R.)

MISCELLANEOUS.

SALINE SOLUTIONS ON DUSTY ROADS.—"In a recent number of the *Bulletin de la Société Industrielle de Rouen*, Messrs. Houzan and Leroy call attention to the use of solutions of the chlorides of sodium, calcium, and magnesium with the object of laying the dust produced by automobiles. The two latter chlorides are especially advantageous owing to the deliquescent nature of these salts. Calcium chloride was first tried for this purpose as long ago as 1828. A solution of this salt having a specific gravity of 10-15°, Beaumé is a suitable strength for sprinkling, and is applied to the roads in the same way as water. This salt has the further advantage of being cheap and non-poisonous, having in fact certain disinfecting properties; it is not corrosive to ordinary metals, and may therefore be stored in metallic vessels, but it attacks the unpainted surfaces of copper, nickel, and brass. Sprinkling with tar or oil is more expensive than with calcium chloride, and this salt does not give rise to dark mud, rendering the roads slippery."—*Times Eng. Supplement*, Sept. 25, 1907. (J. A. W.)

Reviews and New Books.

(We shall be pleased to review any Scientific or Technical Work sent to us for that purpose.)

THE MINERAL INDUSTRY. Vol xv. 1906. 21s. (New York City, U.S.A.: The Hill Publishing Company.)

"*The Mineral Industry* is too well known to make any detailed criticism of the issue lately to hand necessary. The current volume, which so far as composition is concerned dates from the end of May last, follows the lines of recent numbers, and is practically a précis of the literature bearing on the period covered. At a time when it becomes more and more a study in itself for the ordinary professional man to keep himself posted in the current technical literature of each year, the release from so much mechanical labour is of the utmost value; and it is in this light that we think the value of our contemporary's compilation should be considered. Other arrangements of the task of dealing with the history of each year's mining and metallurgical progress may at first sight seem more attractive, but we question if in the end any would be found of as great a value by the ordinary practitioner as this, which leaves him free to devote his own time to any subject of specialisation or matter demanding reflection rather than familiarity with multiplicity of detail.

In conclusion, we need only say that anyone intelligently considering the enormous scope of the work, and recognising on what subjects an American publication is naturally best informed—in a word, using the matter with discretion—will find the greatest assistance from the current volume, especially where, as is the case with most mining men, works of reference of a more specialised kind are beyond his reach."—*London Mining Journal*, Sept. 21, 1907, p. 361. (A. R.)

THE COPPER MINES OF THE WORLD. By WALTER HARVEY WEED. Large 8vo. xiv. and 375 pp. (New York and London: Hill Publishing Company, 1907.)

Mr. Weed was for over twenty years on the United States Geological Survey, which country produces 55% of the world's output of copper, and as he has seen practically all the big mines of Canada and Mexico as well, the book could scarcely fail to become the standard work on copper deposits.

The high expectations concerning it are fully justified on perusal of the contents, which are classed under two heads: 1. Geology of Copper; 2. Description of the Principal Copper Mines of the World; under both of which most valuable information is given, largely the result of the author's own observation.

Of particular interest are the sections on "Outcrops and Gossan Formations," and "Genesis of Copper Deposits," in which the results of recent work in this department of geology are clearly set forth.

The printing is excellent, and the book contains no less than 159 illustrations, ranging from microphotographs of copper bearing rocks to maps of copper districts. It is, therefore, distinctly a book to be read by all who wish to be up to date on copper occurrences.—(G. H. S.)

Selected Transvaal Patent Applications.

RELATING TO CHEMISTRY, METALLURGY AND MINING.

Compiled by C. H. M. KISCH, F.M.Chart.Inst.P.A. (London), Johannesburg (Member).

(N.B.—In this list (P) *means provisional specification, and* (C) *complete specification. The number given is that of the specification, the name that of the applicant, and the date that of filing.)*

(C.) 420/07. C. Neumann. Improvements in air compressors. 27.9.07.

(C.) 421/07. J. M. Adams. An apparatus for carrying paraffin tins and the like and to enable such tins to be used as buckets. 28.9.07.

(P.) 422/07. W. H. Angus (1), S. Martin (2). Improvements relating to amalgamated plates employed in the recovery of metals from ores. 28.9.07.

(P.) 423/07. O. Rasmussen. Improvements in tamping plugs. 3.10.07.

(C.) 424/07. C. P. Stewart. Process for making sugar. 4.10.07.

(C.) 426/07. J. Russell (1), J. H. Mulligan (2). Improvements in apparatus for recording bell or like signals specially applicable to mines. 4.10.07.

(C.) 427/07. G. Schultz. Improvements in the production of aromatic nitro-compounds from solvent naptha, and in the use of the same for producing safety explosives. 4.10.07.

(P.) 428/07. W. C. Stephens. Coupling device for connecting hose fittings to rock drilling machines and for analogous purposes. 4.10.07.

(P.) 429/07. E. J. J. Saville. Improvements in hose couplings. 4.10.07.

(P.) 430/07. H. Zerning. Improvements relating to the manufacture of filaments for electric incandescent lamps. 4.10.07.

(P.) 431/07. J. H. Hughes (1), R. H. Harriss (2). An improved means of disintegrating and rendering friable diamond bearing material by the application of chemicals and gases. 5.10.07.

(P.) 432/07. J. van Waart. A device or construction of a water wheel with double boxes for discharging water and other fluids with or without producing power. 7.10.07.

(P.) 434/07. J. W. Cowie. Improvements in means for driving ore feeders of stamp batteries. 9.10.07.

(P.) 435/07. N. J. Sundin. Automatic safety-catch and brake for lifts and hauling skips. 9.10.07.

(C.) 437/07. R. Stanley. Means and method of crushing and treating ores for the extraction of precious metals. 11.10.07.

(P.) 439/07. J. Crause (1), M. Cohen (2). Improvements in the chemical treatment of slimes and ores. 16.10.07.

(P.) 441/07. E. O. Blackmore. Improvements in or relating to shaking chutes for conveying ore in mines. 18.10.07.

(C.) 442/07. Dr. Novak (1), Dr. R. Escales (2). Improved process for accelerating the separation of nitro-glycerine from acids. 19.10.07.

(C.) 443/07. O. Hetlesaeter. Improvements in excavators. 19.10.07.

(C.) 444/07. E. Bellini (1), A. Tosi (2). System of directed wireless telegraphy. 19.10.07.

(C.) 445/07. W. E. Morton. Improvements in the means for lubricating the pins of cranks or similar moving parts of locomotive or stationary engines and the like. 19.10.07.

(P.) 446/07. A. B. E. W. Richards (1), Executrix dative of J. W. Richards (2). Improvements in machines for the manufacture of cupels and the like. 21.10.07.

(P.) 448/07. J. Nicholson. Improved centrifugal apparatus for filtration or separation of liquids from solids. 23.10.07.

(C.) 449/07. The Butlin Gear, Ltd. (1), G. L. Butlin (2). Improvements in power transmission gearing. 24.10.07.

(P.) 450/07. W. C. Stephens. Improvements in rock drills. 24.10.07.

(C.) 451/07. W. O. Pelt. Process for compressing, purifying, drying and cooling air and other gases. 25.10.07.

Changes of Addresses.

Members and Associates are requested to notify the Secretary immediately of any change in address, otherwise it is impossible to guarantee the delivery of Journals or Notices. The Secretary should be at once notified of non-receipt of Journals and Notices.

ALLEN, J. A., *l/o* Cleveland; c/o H. Leupold, Esq., 544, Bart Mitre, Buenos Aires, South America.

ATKINSON, C. E., *l/o* Sinanombi; Globe and Phœnix Mine, Queque, Rhodesia.

BLACK, JAMES, *to* Buck's Reef Mine, Colleen Bawn Siding, Rhodesia.

BRICKHILL, H. G., *l/o* Brakpan; Simmer and Jack Proprietary Mines, Ltd., P. O. Box 192, Germiston.

BROOKS, E., *l/o* Jupiter; P. O. Box 108, Krugersdorp.

DAVIS, R., *l/o* Queque; Waterfall Syndicate Mill, Penhalonga, Rhodesia.

DOUGLASS, ROSS E., *l/o* Crafton, Penna.; Choix, Sinaloa, Mexico, via Nogales.

DRAKE, FRANCIS, *l/o* Sydney; 43, Threadneedle Street, London, E.C.

FORD, S. H., *l/o* Luipaardsvlei; 5, Osborne Terrace, Ashley Down Road, Bristol, England.

HYLAND, L., *l/o* Hartley; Gatooma Station, Rhodesia.

JACKSON, G. T., *l/o* Egypt; West View, Finningley, Doncaster, England.

JENNINGS, T. B., *l/o* Johannesburg; P. O. Box 294, Germiston.

KOTZÉ, R. N., *to* P. O. Box 2807, Johannesburg.

MACK, J., *l/o* Hartley; Rouge Mine, Gatooma, Rhodesia.

MOSSOP, T. J., *to* Block B, P. O. Box 98, Langlaagte.

PATTERSON, P. F., *l/o* Lomagundi; c/o Messrs. Turrell & Patterson, Mining Engineers, Penhalonga, Rhodesia.

RHODES, C. E., *l/o* El Oro; Guanajuato, Estado de Guanajuato, Mexico, Apartado 25.

SOUTHWELL, B., *l/o* Germiston; York Mine, P. O. Box 54, Krugersdorp.

THOMAS, D. L., *l/o* Johannesburg; Manager, Lydenburg Proprietary Mines, Ltd., Lydenburg.

VAUGHAN, J. E., *l/o* Johannesburg; P. O. Box 204, Boksburg.

WADE, R. A., *l/o* Germiston; Gatooma, Rhodesia.

WAYNE, T. H. B., *to* P. O. Box 584, Durban.

WILSON, J. K., *l/o* Lydenburg; Angelo G. M. Co., Ltd., East Rand.

WISDOM, G. E., *l/o* Johannesburg; Riverlea Mine, Queque, Rhodesia.