ZHANG, Y.D., YANG, Y.H., and LI, K.M. Systems simulation for dragline selection in open cast mines. *Application of Computers and Operations Research in the Minerals Industries,* South African Institute of Mining and Metallurgy, 2003.

Systems simulation for dragline selection in open cast mines

Y.D. ZHANG, Y.H. YANG, and K.M. LI
China University of Mining and Technology, Xuzhou, Jiangsu, China

The selection of stripping dragline is a complicated problem. Several factors, such as the deposit buried conditions, the demand of mine production rate, cast blasting result, the mining/stripping operation method and parameters, etc. may comprehensively influence the optimal selection of technical specifications of the dragline. Under these circumstances, the basic thinking and procedures for dragline selection are put forward as follows.

- *Step 1*—Initially estimate the dragline annual stripping rate and stripping bench height according to the annual coal production rate and advancing speed of mining front. Then the feasible alternatives of dragline sizes can be calculated and selected from the existing dragline series.
- *Step 2*—A computer simulation model is developed to simulate the dragline stripping operation, to obtain a series of working face parameters, then to select the best dragline alternative. This step can be interactively iterated until the satisfactory results are obtained.
- *Step 3*— Sensitivity analysis can be done with the systems simulation model by changing the stripping bench parameters, e.g. stripping bench height and cut width, etc. to verify and modify the selection results if necessary.

The mathematical model for dragline stripping simulation has been set up. The flowchart of the model is shown.

A case study for a large surface coal mine with annual production rate of 16 Mt/a is followed. The dragline bucket capacity and operation radius, stripping bench height and cut width as well as other parameters are comprehensively optimized and selected.

Keywords: Open cast, dragline, specification, selection, cast blasting

Introduction

Open cast (strip mining) method in surface mines has obtained rapid development worldwide in recent years. In China, there are a number of mining areas, the occurrence conditions of which are suitable for application of open cast method with draglines.

The open cast method in surface mines combines overburden excavation, haulage and dumping operations with one equipment. The annual stripping volume for one dragline is usually over 10 Mil. m^3.

To meet the demand of practical mines, the parameters for dragline selection should mainly include: the bucket capacity, the operation radius, the digging depth and the dumping height of the dragline. Among them, the bucket capacity and operation radius are relatively basic ones.

The selection of stripping dragline is a complicated problem. There are a number of factors which comprehensively influence the optimal selection of the technical specification of the dragline, e.g.:[1–3]

- The demand of mine production rate
- The cast blasting result for hard rock overburden
- The stripping method of dragline(s), e.g.: simple side casting, advance benching, extended bench, pull-back method, etc
- Parameters of stripping bench, such as bench height, cut width, working front length, etc
- Serial equipment supply from different manufacturers; application or reformation of used equipment.

The basic thinking and procedures for dragline selection

The procedure of dragline specification selection

- *Step 1*—Initially estimate the dragline annual stripping rate and stripping bench height according to the annual coal production rate and advancing speed of mining front, then the feasible alternatives of dragline sizes can be calculated and selected from the existing dragline series.
- *Step 2*— A computer simulation model is developed to simulate the dragline stripping operation, to obtain a series of working face parameters, then to select the best dragline alternative. This step can be interactively iterated until the satisfactory results are obtained.
- *Step 3*—Sensitivity analysis can be done with the systems simulation model by changing the stripping bench parameters, e.g. stripping bench height and cut width, etc. to verify and modify the selection results if necessary.

The initial selection of dragline bucket capacity

The advancing speed of the working front in a surface mine:

$$v = \frac{A_p}{h_c \cdot L_c \cdot \gamma} \qquad [1]$$

where: v — annual advancing speed of working front, m/a
A_p —coal production rate from the open pit, t/a
h_c —thickness of the coal seam, m.
L_c —length of working front on coal bench, m
γ —average unit weight of the coal seam, t/m^3

The annual stripping volume of the dragline:

$$A_s = HLv \quad [2]$$

Where: A_s—annual stripping capacity of the dragline, m^3/a
H — stripping bench height, m
L — length of working front on stripping bench, m

The calculated bucket capacity:

$$V_0 = A_s / A_0 \quad [3]$$

Where: V_0 — calculated bucket capacity, m^3
A_0 — annual production volume of unit bucket capacity, m^3/m^3.a

The dragline bucket capacity is then obtained by additional consideration of blast-casting and rehandle rate:

$$V = V_0(1-\mu+\eta) \quad [4]$$

Where: V — the actual bucket capacity of the dragline, m^3
μ — the efficient casting rate of cast blasting, the associate volume of which is not necessary to be moved by the dragline.
η— rehandle rate of the dragline, which is corresponding to the rehandle volume percentage for the dragline operation.

The initial selection of the boom specification of the dragline

According to the bucket capacity, the necessary suspension weight can be obtained by the product of the bucket capacity with the rated suspension load:

$$W = V * U \quad [5]$$

where: W — the necessary suspension weight, t
V — the bucket capacity, m^3
U — the rated suspension load, t/m^3

Usually 2.97 t/m^3 can be taken as the rated suspension load. The boom length and angle can then be obtained for a specified dragline type.

If none of the existed dragline series could meet the practical demand, special specification may be raised to place an order for the dragline manufacture.

Simulation mining and comprehensively optimal selection

Traditional method for dragline selection used to do the calculation by drawing graphs and through formulas[4–6]. It is difficult to reflect the complex influence of multiple mining/stripping factors and/or to obtain the optimal selection at one time. So computer simulation mining technique has been applied which is convenient to consider multi-factors, via interactive iteration to obtain comprehensively optimal result.

Set up the mathematical model for dragline stripping simulation

The flowchart of the mathematical model is shown in Figure 1.

Functions of the mathematical model

- Input the specifications of existing dragline series, e.g. bucket capacity, operation radius, diameter of the tub, etc.
- Simulate different stripping methods, e.g. simple side casting, extended bench, pull-back method, etc. to choose the proper type and size from the dragline series.
- Some important parameters can conveniently be obtained by strip mining simulation, among them two indices—the efficient blast casting rate (μ) and rehandle rate of the dragline (η) mentioned in Formula[4] should be emphasized.
- While none of the existing dragline series can meet the demand of the operation, some technical measures may be taken, such as a coal pillar with a triangle section may remain and the necessary coal pillar size can also be calculated by this simulation model. Sometimes in accordance with specific conditions specified sizes of the dragline may also be designed.
- For alternatives with different parameters of stripping bench, i.e. bench height, cut width, etc., different results can be obtained to do the sensitivity analysis and comparison for final comprehensive optimization.

A case study

A surface coal mine with original planning productivity of 12 Mt/a will be extended to 16 Mt/a. Dragline will be applied to strip hard rock above the coal seams. The coal seams are buried with the deep angle of 3~5° and average coal thickness of 24 m.

Various stripping methods have been simulated and different alternatives have been analysed. The results of part alternatives with single dragline operation and extended bench method are shown in Table I. Mining section of one alternative is shown in Figure 2 as an example, while the coal pillar size is shown in Figure 3.

Analysis of the simulation results

By analysing Table I some points can be drawn:

- While single dragline is applied to do the stripping work, the model of 2570WS can be selected, i.e. the maximum existing type in B-I company series
- With single dragline and extended bench method, the demand of stripping capacity can be met when the bench height/cut width = 50 m/50 m are taken. When the bench parameters are over this limit, coal pillars with associate sizes need to remain, thus coal recovery rate will be decreased and the stripping ratio will be increased
- The rational stripping bench parameters for single dragline operation can be taken as: bench height—50 m, cut width—50 m. The annual stripping capacity with the dragline may reach 26 M m^3/a, which can meet the increased stripping capacity for mine extension.

References

1. *Surface Mining* (2nd edition). Kennedy B.A. (Eds). Littleton, SMME Inc, 1990. pp. 636–655.
2. Walking draglines—Terminology/Application/Selection. Bucyrus-Erie Company, 2001. pp. 1–24.
3. The fundamentals of the dragline (6th edition). The Marion Division of INDRESCO Inc, 1993. pp. 1–28.
4. MICHAUD, L.H. and CALENDER, P.N. The Development of a computerized dragline mine planning package utilizing interactive computer graphics. *CIM Bulletin*, vol. 86, no. 973. 1993. pp. 37–42.
5. SMITH, B. and WATTS, R. Selecting a new dragline. *World Coal,* vol. 10, no. 3. 2001. pp. 11–16.
6. CARTER, B.A. Black Thunder boosts production with MineStar. *Coal Age,* no. 12. 2001. pp. 35–37.

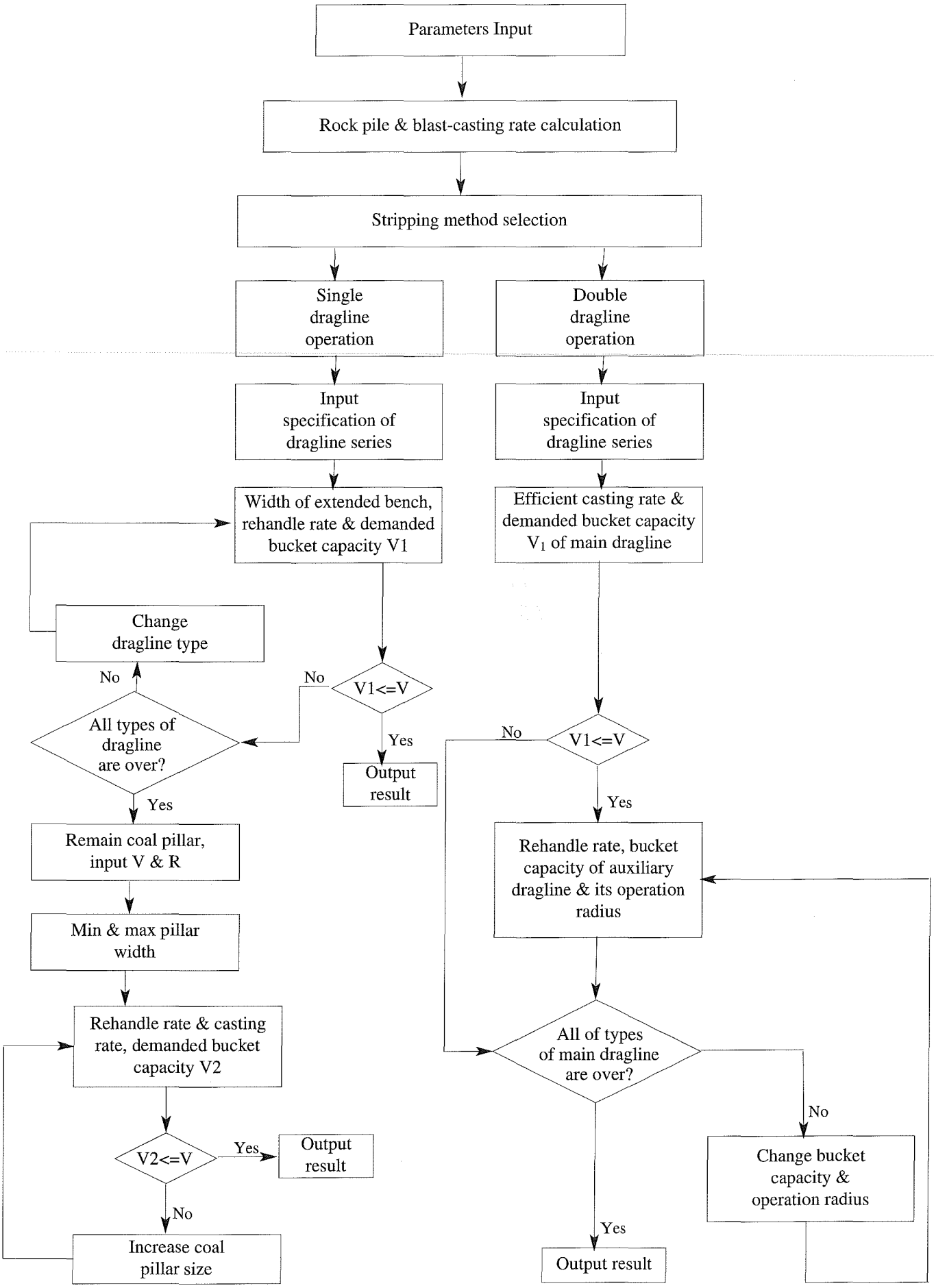

Figure 1. The flow chart of the mathematical model for dragline stripping simulation

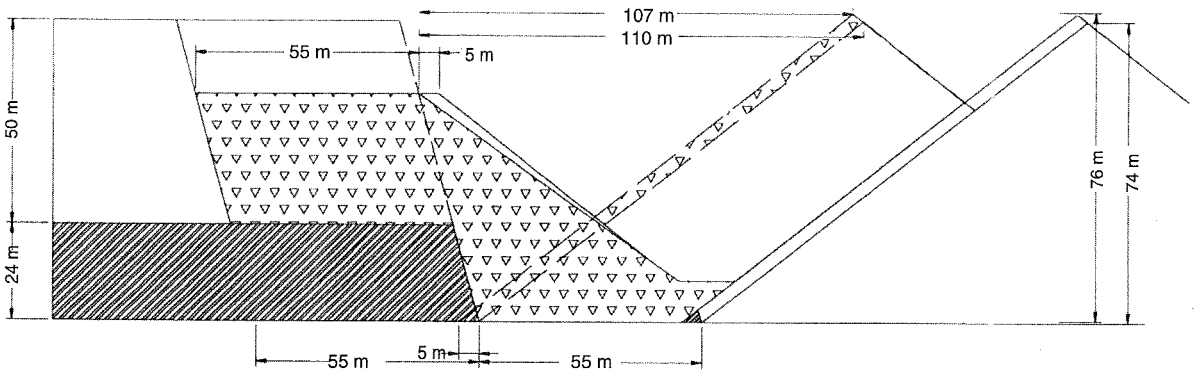

Figure 2. The alternative with bench height/cut width = 50 m/55 m

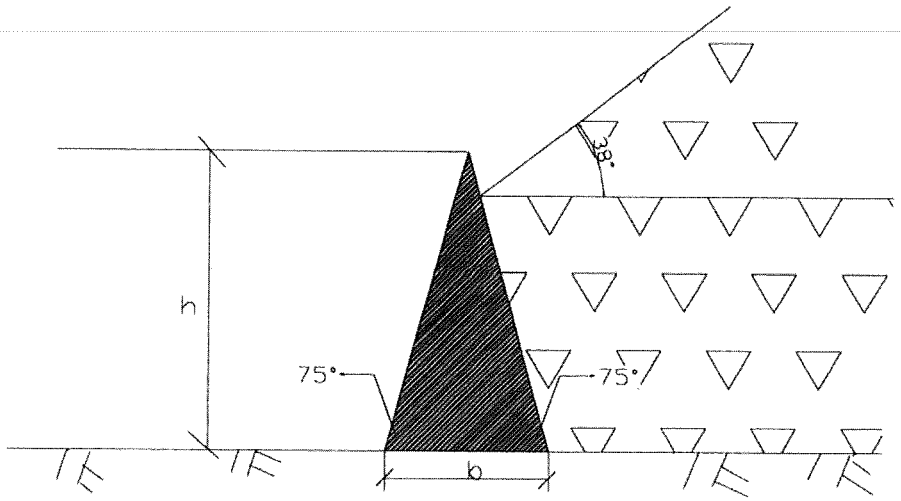

Figure 3. Coal pillar size

Table I
Results of single dragline alternatives

Bench height /cut width (m)	Efficient blast-casting rate	Rehandle rate	Width of extended bench, m	Coal pillar size b*h, m	Dragline bucket capacity, m³	Dragline operation radius, m
50/50	0.235	0.020	5	0	85.5	121.9
50/55	0.246	0.028	5	4.2*7.8	85.5	121.9
50/60	0.239	0.0379	5	5.8*10.8	85.5	121.9
55/50	0.319	0.0299	8	7.5*14.0	85.5	121.9
55/55	0.316	0.0353	9	9.1*17.0	85.5	121.9
55/60	0.313	0.0333	8	12.4*23.1	85.5	121.9
55/65	0.311	0.0299	7	15.7*24	85.5	121.9
60/50	0.393	0.043	12	14.1*24	85.5	121.9

Note: The coal pillar size is shown in Figure 3, where b—bottom width, h—height of the coal pillar