DIERING, J.A.C. and STACEY, T.R. Three-dimensional stress analysis: a practical planning tool for mining problems. APCOM 87. Proceedings of the Twentieth International Symposium on the Application of Computers and Mathematics in the Mineral Industries. Volume 1: *Mining*. Johannesburg, SAIMM, 1987. pp. 33 – 42.

Three-dimensional Stress Analysis: A Practical Planning Tool for Mining Problems

J.A.C. DIERING and T.R. STACEY

Steffen, Robertson and Kirsten (Mining) Inc., Johannesburg, South Africa

All underground openings are three-dimensional, and in many cases it is not valid to analyse two-dimensional sections. This has been a problem in the past owing to the magnitude and complexity of three-dimensional stress analysis. In this paper a three-dimensional boundary element approach, using non-conforming quadratic elements, which is specifically applicable to underground excavations, is described. In addition, the philosophy of application of stress analyses is discussed. Three case histories are presented to demonstrate the practical nature of the approach as a tool in solving mining problems.

Introduction

All mining operations involve layouts of excavations in three-dimensional space and hence the rock mechanics problems associated with them are also three-dimensional. Often the geometry of the problem is such that it can be examined realistically in two dimensions. However, there are many cases in which the geometry, geology or stress conditions either cannot be simplified to two dimensions, or are such that the validity of such a simplification is doubtful. These situations have presented a major challenge in the past owing to the magnitude and complexity of methods of three-dimensional stress analysis at the time. This usually resulted in the application of a two-dimensional approach even if the validity of that approach was doubtful.

Nowadays, with the availability of powerful low cost computers, and the improvement in their graphics capabilities, three-dimensional stress analysis of mining problems has become a relatively simple and practical operation.

Firstly, a new three-dimensional boundary element formulation which has been designed specially for mining problems is presented. Next, the philosophy of application of three dimensional analyses is described. Finally, examples of practical applications of the method are given.

Three-dimensional boundary element stress analysis: an overview

Mining problems usually involve excavations of finite size in an infinite or semi-infinite rock mass. These can be described as infinite domain problems, in contrast to the finite domain problems encountered in mechanical engineering, ie finite-size components sub- jected to forces and deformations.

There is a fundamental difference of approach to the the analysis of these two classes of problems. In the infinite domain problems, the deform- ations and stresses are required in an infinite or semi-infinite rock mass. Conversely, in the finite domain problems, stresses and

deformations are required within the finite body being analysed. These differences are a significant consideration in the choice of solution technique and the formulation of that technique.

In mechanical engineering problems, geometry of components is precise and high accuracy of results is usually required. In mining problems, the shapes of excavations and the strength and deformation properties of the rock mass are not well defined and therefore precision of results is not possible. Hence, a less precise solution technique is more acceptable for most mining problems. Furthermore, mining problems often involve multiple excavations, many of which may have an influence on each other, but be sufficiently far apart for the influence to be an overall one rather than a detailed one.

The process of carrying out a boundary element stress analysis exercise consists of the following basic steps:

a) Decide which excavations need to be modelled and which may be ignored because they are either too small or too remote from the area of interest.

b) Decide upon the extent to which the geometry of the selected excavations may be simplified so that numerical modelling is possible.

c) Divide each excavation into a number of excavation 'faces'. For example, the hangingwall, footwall and various sidewalls would usually be separately identified.

d) The next decision relates to the number of boundary elements which will be used to model each of these faces, so as to provide a sufficiently accurate solution.

e) The spatial coordinates of the corners of each element must then be defined so that the element is correctly located in space. These corner points are referred to as geometric nodes.

f) Once the boundary elements have been defined, various checks must be carried out to ensure that all excavation faces have been modelled, and that the distribution of large and small elements is appropriate to the particular excavation geometry.

g) Loading conditions are then applied to the boundary element model. Actual excavation deformations and those predicted by the model should resemble one another.

h) The modelled excavation deformations are then used to calculate stresses and displacements at selected benchmark points within the rockmass.

Now, each element may only deform in certain prescribed modes. However, the excavations themselves may, of course, achieve any deformation state depending upon the applied loading. There are, therefore, two conflicting objectives controlling the choice and definition of a boundary element model. The number of elements needed to model each excavation must be sufficiently large such that reasonable accuracy is achieved. Conversely, the total number of elements used must also be sufficiently small so that the user effort in preparation of the model and the computing time and space requirements are not prohibitive.

Three-dimensional boundary element formulation

Each different boundary element formulation models surface deformations and tractions in a different way. If displacements and tractions are constant over the full area of an element, then reference is made to a constant element formulation. If displacements vary according to a quadratic or second order polynomial, then they

are called quadratic elements. The shapes of these elements are usually triangles or quadrilaterals, although elements with curved sides and shapes may also be used. If displacements are continuous between adjacent elements, then they are called continuous quadratic elements. If elements are not required to conform with one another along their edges, and if displacements are discontinuous between adjacent elements, they are then called non-conforming elements.

Examples of various element types are shown in Figure 1. Various formulations have been developed specifically for mining applications.[1,2,3,4] The first practical example presented later in this paper uses constant quadrilateral elements developed by Diering.[3] The other examples make use of the newly developed non-conforming quadratic elements.[5]

The non-conforming quadratic elements provide the following features or advantages for mining related stress analysis problems :

a) Each excavation face may be discretised into elements independently of other faces.

b) Fewer elements are required to model a face than for other formulations. Often, only one element per face will give sufficient accuracy for practical applications. This is of major importance as it enables larger problems containing more excavations to be modelled in more detail.

c) Elements may be triangular or quadrilateral, planar or curved.

d) Up to five different geological zones each with different material properties may be accommodated, although very non-homogeneous geologies will still require simplication into one or a few subregions.

e) Solution of equations is carried out using the method of block successive over-relaxation associated with the application of a lumping technique to reduce data storage requirements.

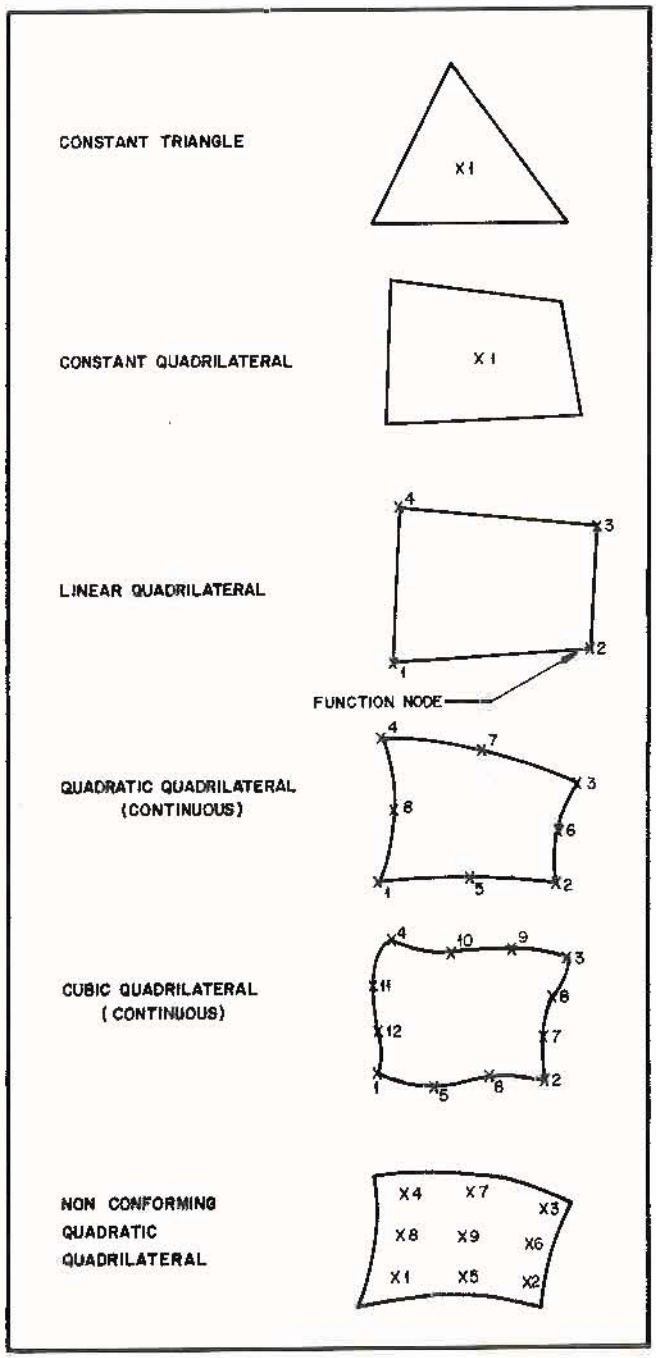

FIGURE 1. Various types of boundary elements

f) Stresses and displacements within the rockmass may be calculated even when the benchmark points are very close to the boundary elements. This is often not possible with other formulations such as the constant elements.

g) Surface stresses and displacements

may be calculated anywhere over an element.

h) The program is not designed for application to tabular excavations although length to height aspect ratios of up to 50:1 may be modelled reliably.

i) The number of elements being used for a given problem may be reducedif geometric and loading symmetries exist. If several identical excavations are in close proximity to one another, then advantage may also be taken of this repeatability to reduce problem size.

j) Large space requirements are demanded, necessitating the use of hard disc mass storage. In this situation, it was decided to structure the program with low core memory requirements, allowing it to be applicable to desktop as well as main-frame computers. This requirement is eased by the choice of the iterative solution method with lumping.

k) Often excavations will have been backfilled or will contain caved material which is applying loads to the excavation surfaces. This material is modelled either as an extra subregion whose behaviour is linearly elastic, or by applying additional surface tractions to the excavation surfaces.

The formulation described above has been developed into a computer program BEAP (Boundary Element Analysis Package). However, even the most sophisticated program is nothing more than a large number of machine instructions. There is still a large gap between a computer program and the practical solution to a complex mining problem.

Philosophy of application of theoretical stress analyses

A fundamental aspect of the philosophy of practical application of theoretical stress analysis techniques to mining problems is the understanding that the actual numbers which result from these analyses must not be accorded too much credibility. Absolute answers are unlikely to be achieved - in fact, it is most important that the obtaining of absolute answers should not be an aim. It is the trends and the results of comparisons between a range of analyses that are important. The analyses must therefore be regarded only as an aid to design and not a design method in an absolute sense. The exercise of formulating the theoretical model, deciding on relevant magnitudes for material properties and loading conditions, and carrying out the series of analyses involves a considerable amount of thought about the problem. The actual results of the analyses add greater and sometimes alternative understanding to this thought process in arriving at a solution to the problem.

Initial analyses of a mining problem should preferably model a geometry or situation in which the behaviour is known, i.e. a back-analysis approach. This will allow the validity of the model to be established by comparison of observed with predicted behaviour. If there is not satisfactory agreement from this comparison, it may be necessary to adjust the model, usually with regard to material properties or loading conditions, until it is validated. It is then realistic to alter the geometry to that required for the modelling of additional excavations extension to the mining, alternative mining layouts, etc. The behaviour of these may then be predicted realistically using the calibrated conditions.

An alternative philosophy of application of theoretical stress analyses is a parameter study approach. In this case a general problem, rather than a specific one, is analysed for a range of parameters, e.g. material properties, in situ stresses, etc. Comparisons of the results allow behaviour trends to be identified. The designer must then judge whether his specific problem fits into the range of the general problem solutions for the purpose of predicting behaviour trends.

The above philosophies should be common for all theoretical analyses. It is important to identify how three-dimensional stress analyses fit into such philosophies.

The three-dimensional stress analysis program described briefly in the previous section is simple to apply, and for most problems requires only a limited amount of data preparation. Even so, however, three-dimensional applications are often conceptually complex, demanding on computing requirements and insufficiently detailed. There is therefore great merit in limiting the three-dimensional applications to essential aspects and, whenever possible, resorting to two-dimensions for examining details. Typically, three-dimensional analyses may be used for the geometrical effects and two-dimensional analyses used to take into account non-homogeneity and assess local failure potential. This combined three-dimensional and two-dimensional approach has proved to be very practical.

Test example

In order to demonstrate the advantages of a non-conforming quadratic element over other element types, a long straight tunnel with square cross section was modelled. It was possible to model this geometry in two or three dimensions. A cross section of the geometry used is shown in Figure 2. Details of geometry, loading and host rock material properties are as follows:

Height	10 m
Width	10 m
Young's modulus	50 000 MPa
Poisson's ratio	0,25
Vertical applied stress	100 MPa
Horizontal applied stress	50 MPa

Numerous comparative runs using constant, continuous quadratic or non-conforming quadratic elements were carried out.

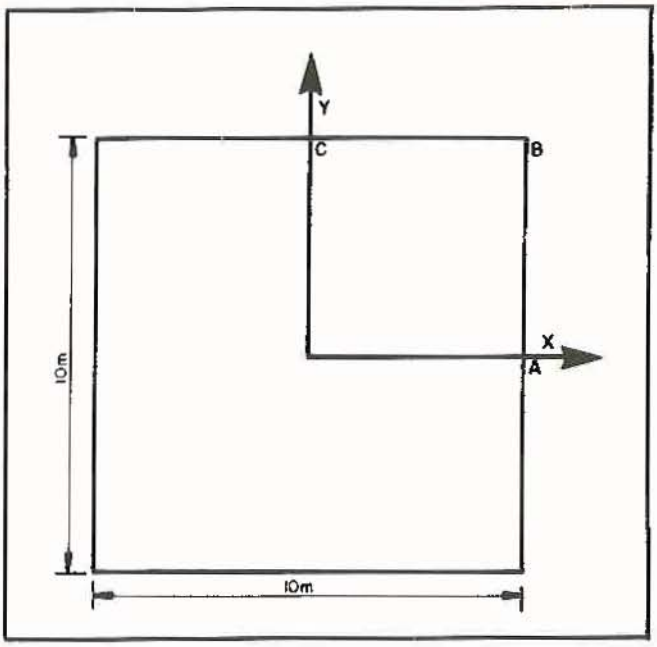

FIGURE 2. Tunnel test problem with square cross section

Figure 3 shows a comparison of the horizontal displacements calculated along the line ABC shown in Figure 2.

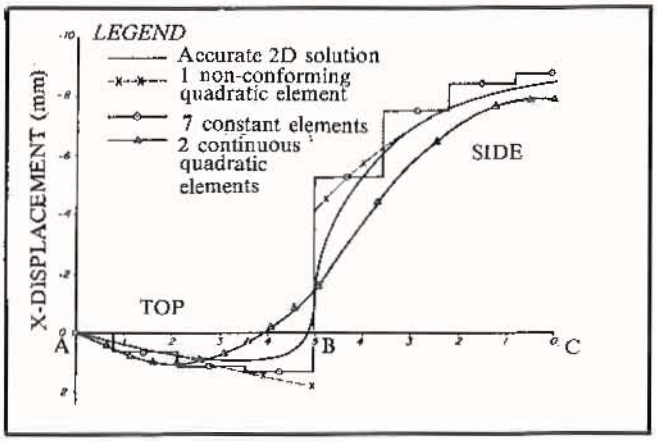

FIGURE 3. Results for tunnel test problem

a) Constant elements - 7 elements perside

b) Continuous quadratic elements - 2 elements per side

c) Non-conforming quadratic elements - 1 element per side

These displacement profiles are compared against a very accurate two-dimensional solution obtained using 100 elements per side. It is seen from Figure 3 that the goodness of fit between the non-conforming quadratic formulation and the accurate solution is generally better than that for the other two formulations. The equivalent number of elements which would be required for a three-dimensional problem is as follows:

Constant elements	7x7 = 49
Continuous quadratic elements	2x2 = 4
Non-conforming quadratic elements	1x1 = 1

From the above, it is seen that there are substantial benefits to be obtained in terms of user and computational effort by using non-conforming quadratic elements. Even so, the constant element formulation MBEM[3] has been used successfully for simpler three-dimensional geometries. This is demonstrated by the first example in the next section. As the geometry becomes more complex, however, the constant element formulation becomes less efficient, and non-conforming quadratic elements are used to good advantage, as demonstrated by the remaining examples in the next section.

Practical applications

The following examples illustrate the requirement for three-dimensional analysis. Detailed results of the analyses are not dealt with since it is the application which is of importance in this paper. Hence the approach to each application and the effort involved in the solutions to each problem are given greater significance.

Excavation interaction at great depth

The implication of mining operations at great depth usually is the development of secondary and sometimes tertiary shaft systems. The transfer horizon from one shaft system to the next involve a complex layout of multiple excavations. Owing to their crucial importance for access and hoisting of ore, the permanent stability of these excavations must be ensured. Further, owing to the depth, the stress field is large, and it is important to avoid interaction of the excavations which might raise the stress levels further.

The proposed layout of excavations for the transfer horizon of a deep level mine is shown in Figure 4.

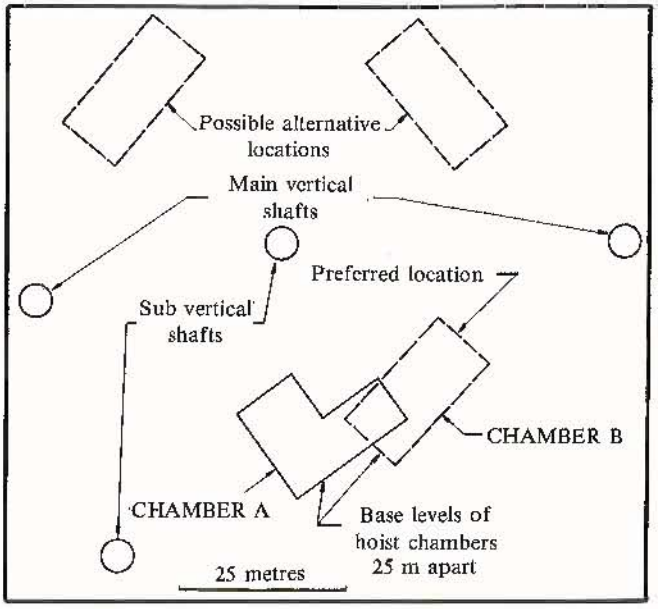

FIGURE 4. Hoist chamber layout with alternatives

In addition to the shafts and excavations shown in Figure 4, there are numerous interconnecting tunnels, shaft bank excavations and inclined ropeways. The two levels shown in Figure 4 are separated by 25 m. It was not possible to assess the degree of excavation interaction in this layout satisfactorily using two-dimensional analyses, and therefore a three-dimensional approach was required. Two phases of analysis were planned:

a) Preliminary analysis to assess degree of interaction,

b) Detailed analysis, if necessay, to determine the effects of interaction.

In the first phase, Chambers A and B, the two closest together, were modelled as shown in Figure 5.

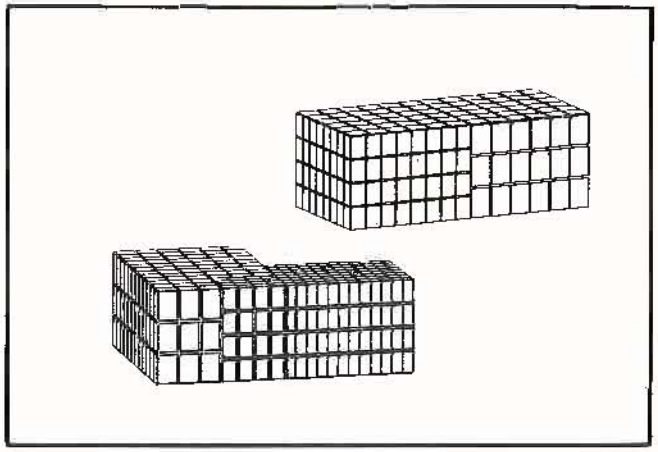

FIGURE 5. Boundary element model for two interacting hoist chambers

No other excavations were modelled. Instead, stresses were calculated at locations of these other lesser excavations, and along shaft and tunnel axes. In this way it was possible to determine whether there was significant modification of the field stresses at these locations caused by the proximity of Chambers A and B. The results of the analysis showed that there was limited interaction of Chambers A and B, and that interaction effects at the other excavation locations were negligible. It was therefore unnecessary to extend the modelling to the more detailed analysis phase.

With such a complex layout of excavations, the only possibility of establishing conclusively the potential interaction effects is by the use of a three-dimensional approach. The example described above illustrates that this approach can be carried out in a very simple and practical way to achieve the design objectives.

Open stope mining layouts

A layout of multiple stope excavations for an open stoping operation at Freda Mine is illustrated in Figure 6.

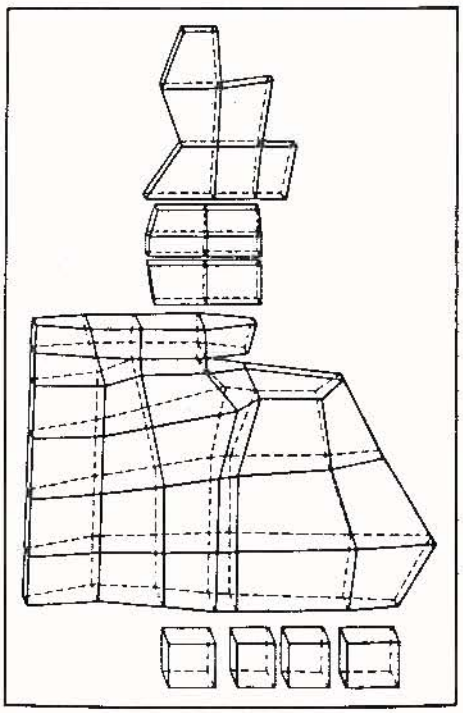

FIGURE 6. Boundary element model for Freda Mine analysis

It shows the definition of the excavations using non-conforming quadratic elements. The orebody is tabular with thickness varying between 5 m and 30 m, and dipping at an angle of 70° to the horizontal. The range of depths below surface of the excavations shown is 150 m to 600 m. The orebody and surrounding rocks are strong (greater than 150 MPa rock material strength), and only localised areas of failure have been observed at current extraction.

Four mining layouts were analysed, as shown diagrammatically in Figure 7. The mining layout existing at present is represented by step 1 in Figure 7. Comparison of the calculated results for this step were then compared with the conditions observed from underground inspections as a means of validating the theoretical model. It was found that

there was good qualitative agreement, i.e. where the model predicted high stresses, some distress was observed underground, and the calculated stresses at these locations were of the same order as the assessed rock mass strengths. This first step therefore provided a good basis for the analysis of subsequent mining layouts as shown in Figure 7. Answers to several specific queries were required:

a) In step 2, what would be the effect of increasing the main stope dimensions in the strike direction on the existing draw point areas, access drives and shafts?

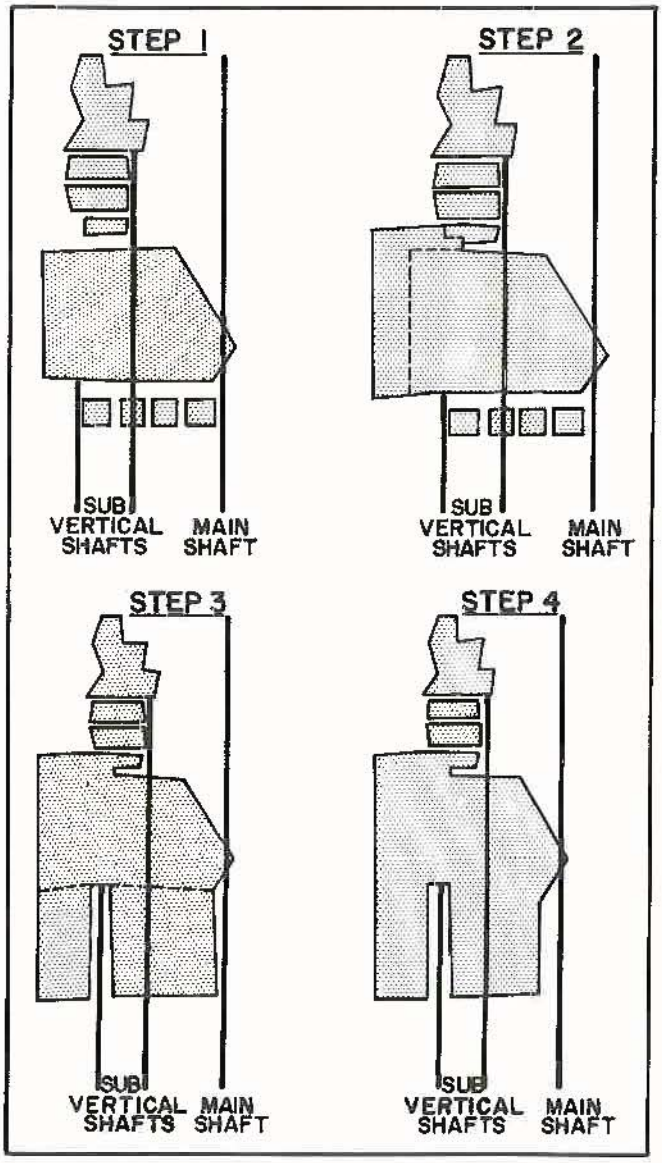

FIGURE 7. Sequential layouts for open stoping example

b) What is the effect of increased extraction to deeper levels on existing access tunnels and shafts? In particular,

i) Should the existing pillars between the four small existing stopes at the deepest level be left to provide stability?

ii) What size of shaft pillar is required to ensure stability of the shaft, since the deepest stopes at present are very close to the shaft?

iii) Can the sub-vertical shaft be maintained, since its top level is in the orebody and the hoist chamber and rope raises are in highly stressed areas? If so, what size of shaft pillar would be required?

iv) Would significantly different conditions result in the footwall and hangingwall from the increased extraction?

The analyses carried out using the three-dimensional boundary element analysis package provided the answers to the above queries and allowed rational mine planning decisions to be taken. Data preparation and running of the analyses required less than 40 man hours, which confirms that the method is now a very practical tool for mining problems.

Draw point layout model for a block cave mining operation

Use of LHD layouts for cave mining operations is becoming increasingly popular. Numerous different horizontal layouts are currently in use at operating mines.[6] A large block cave mining operation will require development of from 500 to 2 000 or more draw points together with associated access tunnels and draw troughs. The structural stability of such a layout must clearly be a major consideration in the design of the layout. The ability to provide a quantitative comparison of the relative stability of alternative draw point structures is very desirable. However, the overall geometry is far too complex

to be modelled in its entirety by current numerical models.

The approach which has been adopted here to tackle this problem is to carry out a two-stage analysis. First stage modelling looks at the global picture which considers the production excavations (block cave areas) as a whole. Individual draw points and access tunnels are not modelled yet. The stress distribution calculated below the base of the global model during the various stages of development and production provides a starting point for the local or detailed model (Figure 8). It is this detailed or local model which provides an almost ideal opportunity for the application of the repeatability technique to reduce problem size and numerical compu-

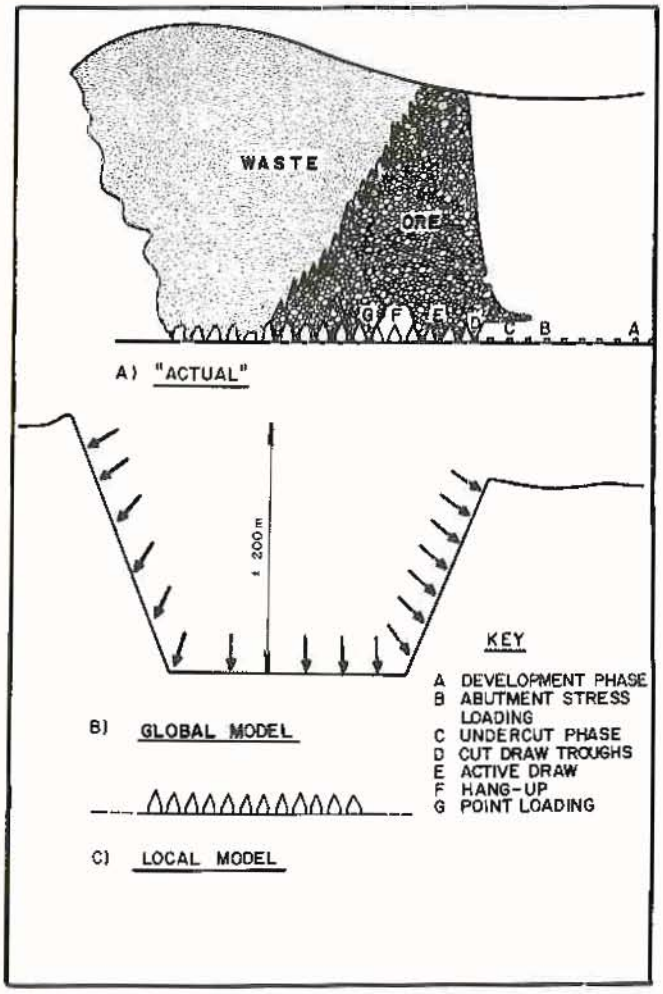

FIGURE 8. Schematic diagram of a block cave showing local and global models

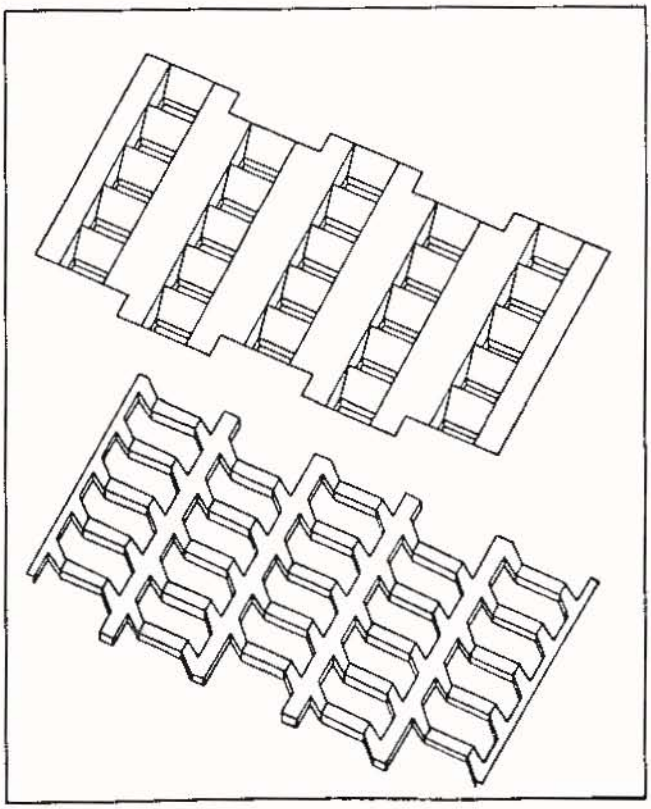

FIGURE 9. Geometry used to model detailed draw point layout

tation effort. Details of the technique are given by Diering.[5] Essentially, it is possible to discretise only one draw trough and its immediate access tunnels. Neighbouring draw troughs (images) are then modelled by the program as behaving in an identical manner to the central draw trough (object).

An example of the draw troughs for one of the models is shown in Figure 9. The access tunnels for these draw troughs are also shown in the figure but have been separated there for clarity. The geometric complexity of this example far exceeds that of the two previous examples, and yet the geometry as shown in the figure has been modelled with less than 50 elements.

With the basic geometry as shown, it is then possible to model the various stages of development of the system from the initial tunnel layout (bottom half of Figure 9) through to the undercut and draw sequences. Regions of low confinement can be identified and appropriate support

designed to minimise damage potential. Alternatively, different layouts can be compared with one another with a view to indentifying the strongest layout.

Both the technique of repeatability and its application to the modelling of draw point layouts are very recent. Current research is aimed at tidying up the method.

Hopefully, however, the example presented here has served to demonstrate the tremendous potential which exists for the use of this type of numerical method as an aid to the design of draw point layouts.

Conclusions

A brief outline of the philosophy of application of three-dimensional stress analysis technique has been presented, together with a description of a new boundary element formulation which has been designed specifically for mining problems. Three examples of the application of the method show that even complex three-dimensional structures may now be modelled economically and efficiently. Whilst these underground excavations are not modelled in every detail, they are modelled with sufficient accuracy to provide a useful design aid for the design of underground excavations, mine layouts and mining sequences. It must be emphasised that sound engineering judgement is still necessary to provide the link between the output from the computer analyses and a final mining plan.

Acknowledgements

Canmet, Energy, Mines and Resources Canada who sponsored much of the work under a Canada/ Manitoba Minerals Development Agreement.

Forbes and Thompson, Zimbabwe for permission to include the Freda Mine example.

References

1. DEIST, F.H. and GEORGIADIS, E. A computer system for three-dimensional elastic analysis using a boundary element approach. Chamber of Mines of South Africa, Research Report No 43/76, Project No. GS1510. 1976.
2. HOCKING, G. Development and application of boundary integral and rigid block methods for geotechnics. Ph D Thesis. University of London, 1977.
3. DIERING, J.A.C. Further developments of the boundary element method with applications in mining. MSc Thesis, University of the Witwatersrand, Johannesburg. 1982.
4. WATSON, J.O. and COWLING, R. Application of three-dimensional boundary element method to modelling of large mining excavations at depth. 5th Int. Conf. on Num. Meth. in Geomechanics, Nagoya. 1985.
5. DIERING, J.A.C. Advanced elastic analysis of complex mine excavations using three-dimensional boundary element techniques. D Eng Thesis, in preparation. 1987.
6. DIERING, J.A.C. and LAUBSCHER, D.H. Practical approach to the numerical stress analysis of mass mining operations. Mining Latin America/Minera Latroamericana, IMM. 1986.