The design, erection and operation of a Purlex plant at Buffelsfontein Gold Mining Company, Ltd.

Published in the Journal, October, 1970

By B. G. MEYBURGH, B.Sc. (Visitor)

Discussion

E. H. D. Carman: The results achieved at Buffelsfontein Gold Mining Company Limited are very encouraging and it seems certain that as far as the conventional uranium recovery process is concerned solvent extraction must entirely supplant the old resin ion exchange process.

The operational costs given by Mr Meyburgh indicate that the chief cost items in solvent extraction are reagents.

TABLE I

Item	Cost c/lb U_3O_8	Per cent of Total Cost
Ammonia	2.78	18.3
Amine	2.06	13.6
Other organic reagents . . .	3.75	24.8
Other costs	6.57	43.3
Total	15.16	100.0

In other words 38.4 per cent of the operational cost at Buffelsfontein is due to the replacement of the organics lost from the plant. It is reported from a wide field of experience that loss, particularly of amine, is a direct function both of the quantity and nature of finely divided suspended solids in the pregnant solution and the extent to which the design of the mixers causes the formation of secondary dispersions which do not easily separate in the settler. There is in addition the unavoidable loss of amine due to its solubility in the aqueous solution which is thought to be about 4 p.p.m.

In order to minimise solvent losses therefore, efficient clarification at the head of the solvent extraction plant would appear to be a most important requirement. For this reason the newly erected plant at West Driefontein Gold Mining Company Limited has two Funda Pressure Filters each with a filtering area of 540 sq. ft. which are together designed to handle up to 440 g.p.m. of filtrate. This plant has not yet been commissioned but preliminary testing indicates that suspended solids in the sub micron size range which do not settle even on protracted standing of the solution, will rapidly blind the clarifiers. This should not affect solution clarity but frequent backwashing adds to the cost of precoating. The difficulty was countered in the laboratory with continuous additions of filter aid in addition to the precoat but, as Table II shows, cost of filter aid is high and its use will have to be optimized against organic losses due to less efficient clarification. This will need much careful observation over a relatively long period of time. Costs shown in Table II are based on Mr Meyburgh's figures adjusted to probable conditions at West Driefontein Gold Mining Company Limited.

The assumption based on small scale testing is that it will cost 5.2c/ton in filter aid to clarify filtrate to a level of about 5 p.p.m. of suspended solids, in order to restrict the amine loss to 10 p.p.m. which is likely to be equivalent to an entrained organic loss worth approximately only 2.6 cents per ton. Of course poor clarification as mentioned earlier is only one of two or even more

TABLE II

	Reagent price (market)	Consumption lb/s. ton Raffinate	Cost c/s. ton Raffinate	Cost %
Filter Aid	7.4c/lb	0.70	5.2	39
Amine	52.6c/lb	0.02	1.1	8
Paraffin	22c/gal	0.24	0.7	5
Aromatics	11c/l	0.14	0.8	6
Ammonia	R127.3/mt	0.04	0.3	2
Other costs	—	—	5.4	40
Total	—	—	13.5	100

causes of organic losses and it seems obvious on the above basis that the operation and economics of pressure clarification will need close investigation.

A second important consideration at West Driefontein has been the design of the pump-mixers which must perform the dual function of phase mixing and providing the necessary hydraulic gradient for counter current flow of the two phases. The arrangement is shown in Fig. 1.

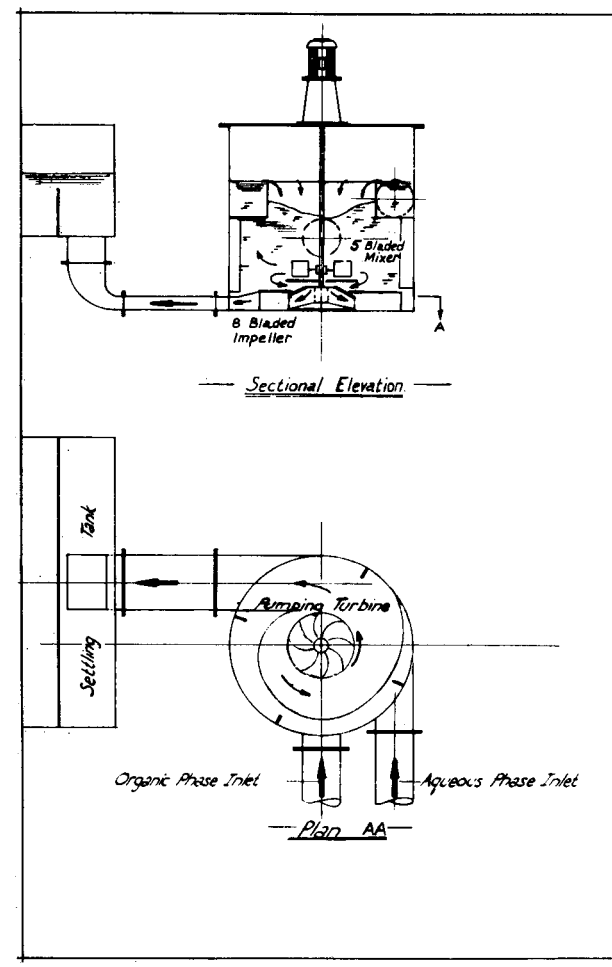

Fig. 1—Arrangement of side entry/bottom discharge pumping turbine

A 5-bladed mixer is provided and lift is imparted by an 8-bladed low-lift pump impeller at the bottom of the tank side-discharging the mixed phases to the settling tank. The aqueous phase is intended to enter the tank via an annular launder and overflow inwards, ideally as a spray, to penetrate the mixed phases in the tank where the organic phase will be continuous. Four baffles are provided to limit swirling.

Although a prototype was tested and appeared to function satisfactorily and mixers of this type have been installed, it is a fact that the design of the 5-bladed mixer does not comply with the value of N^3d^2 in Vermeulen's formula,

$$s \text{ is proportional to } (N^3 d^2)^{0.4}$$

which Bellingham[2] reported should be below about 20. Here s is the specific interface of the two-phase system which is inversely proportional to the mean droplet diameter, d is the impeller diameter in feet and N the speed in r.p.s. Bellingham reported that if the value of $N^3 d^2$ exceeded 50, 'secondary dispersion was invariably present'. The value of $N^3 d^2$ for the mixer shown in Fig. 1 is 73, d being 1.75, N 2.88 and installed horsepower 7.5. Tank dimensions are 5 feet diameter by 5 feet high.

Although it was appreciated that the design of the mixer-impeller could easily be changed if found to be unsatisfactory and that it might even be possible to operate without it, and furthermore the blades could be reduced in size or even profiled, provision has been made for the comparatively simple substitution of the rather more conventional mixer shown in Fig. 2.

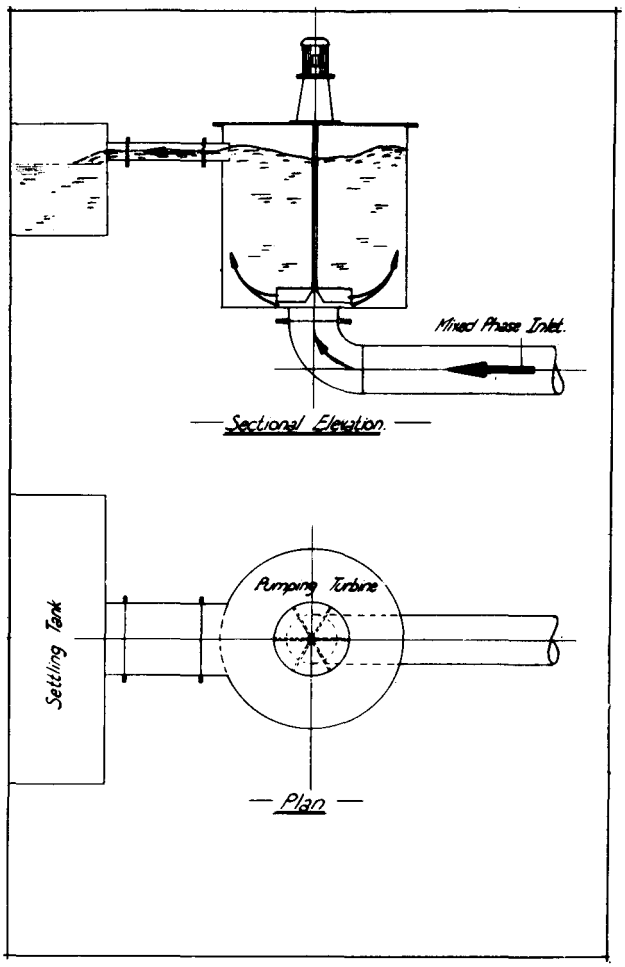

Fig. 2—Arrangement of bottom entry/top discharge pumping turbine

In this design, $N^3 d^2$ is 12 with d 3.33, N 1.0 and installed horsepower 5, tank dimensions again being 5 feet by 5 feet.

If Vermeulen's formula is written in the form

$$s = k(N^3 d^2)^{0.4}$$

where k is a design constant it is obvious that the changes in the value of k will be relatively more significant than changes in $N^3 d^2$, and an approach to the problem by attempting to reduce k rather than $N^3 d^2$ seems logical. Transfer of uranium has been found to be rapid and it is also possible that mixing of a much lower order of intensity than generally seems to be practised, might be possible.

REFERENCES

1. T. Vermeulen, G. M. Williams, and G. E. Langlois. *Chemical Engineering Progress*, 51: 85F (1955).
2. A. Bellingham. The application of solvent extraction to the recovery of uranium from El Sherana ore. *The Proceedings of the Australasian Institute of Mining and Metallurgy* **198**, p. 85 (1961).

D. C. Streicher*: Western Reefs Exploration and Development Company Limited operated a 240 g.p.m. Purlex solvent extraction plant for 18 months from June, 1968, to December, 1969, and thereafter went onto a full scale 1 000 g.p.m. Purlex Plant. The pilot plant was of a similar construction to the Buffelsfontein plant and isodecanol was used as a third phase inhibitor. The main plant is entirely of stainless steel construction and uses compact extractors in the pregnant solution extraction section instead of the more conventional mixer settler arrangement and this plant was commissioned using an aromatic third phase inhibitor Solvesso 150.

No serious fungal growth problems were encountered while using isodecanol on the pilot plant although small traces of what was thought to be a fungus were evident. The present operation with Solvesso has shown no signs of any fungus whatsoever but other disadvantages of Solvesso make it extremely costly and most undesirable. It has now been decided to replace the Solvesso with isodecanol and this should take place within the next two months.

Objections to Solvesso 150 may be divided into two categories: (a) in the process itself and (b) side effects.

(a) *Process*

- (i) It has a higher surface tension than isodecanol and thus causes a slower separation of organic and aqueous layers from a mixed phase. In the plant extractors a fast separation rate is of extreme importance.
- (ii) Due to this higher surface tension it appears that entrained solvent in minute particles offer a far greater resistance to any separation and coalescing, thus increasing the solvent loss.
- (iii) The organic phase is more costly with Solvesso than with isodecanol.
- (iv) The relative density of the solvent mixture with Solvesso is 0.819 and that with isodecanol is 0.780. This lower relative density of the latter mixture also favours a faster separation rate.

(b) *Side Effects*

- (i) It severely attacks all soft and hard rubber lined areas in other sections of the uranium and flotation plants. Even the smallest amounts of entrained solvent present in the raffinate can cause the complete separation of rubber lining from a pipe column or from the interior of a pump.

(ii) It completely upsets the efficiency of pyrite flotation from the uranium plant residues as the raffinate is used as a diluent and acidifier of these residues for pre-flotation conditioning of the slimes. This can be overcome by using fresh water and acid but for reasons of cost and acute water shortage, it is imperative that the raffinate be used in the Western Reefs metallurgical complex. At present the raffinate is contacted with a detergent solution to emulsify entrained solvent, thus rendering it almost inactive.

(iii) It creates an unpleasant atmosphere in the flotation plant by irritating the eyes and nostrils of persons working there.

(iv) Any spillage from leaks or sampling removes all paint from surfaces with which it comes in contact.

It will thus eliminate much necessary maintenance to rubber lined parts and make operational procedures easier and less costly in the whole metallurgical complex if Western Reefs can successfully change over to isodecanol.

In Table III Mr Meyburgh states that the sulphuric acid content of pregnant solution must be controlled at a level above 2.5 g/l to avoid high solvent loss. At Western Reefs Exploration and Development Company Limited the same phenomenon was found to hold good but the control must be between 3.0 g/l and 3.5 g/l. Test work was carried out and this revealed some very interesting aspects.

The separation rate of emulsions increases as the acid content of the aqueous phase decreases until a minimum point is reached where the settling very suddenly becomes disastrously slow (at about 2.6 g/l acid). On the other hand, under plant operating conditions with an acid content below about 4 g/l the stability of the aqueous continuous emulsions increases very rapidly and a higher acid content would be far more desirable as aqueous continuous conditions promote high solvent losses. It is therefore obvious that a compromise must be reached between these upper and lower levels for acidity in pregnant solutions. Setting the upper and lower levels at 3.5 g/l and 3.0 g/l on the full scale plant gave the best results and any slight deviation from these can be detected almost immediately.

* Uranium Plant Superintendent, Western Reefs Exploration & Development Co. Ltd.

P. de Bruyn: We wish to congratulate Mr Meyburgh on the excellence of his paper entitled 'The design, erection and operation of a Purlex plant'. We feel there is some justification for additional comments on the use of acid and ammonia scrub solutions.

In the Vaal Reefs plant the scrub section consists of 4 mixer settler units. The aqueous and solvent phases move, in the usual manner, countercurrently through the four units. Ammonium hydroxide is added to the 4th unit to a pH of approximately 2.8, while 10 per cent sulphuric acid is added to the 2nd stage.

Experience gained at the Western Reefs pilot plant indicated that no benefit was derived from the addition of the scrub additives, sulphuric acid and ammonia. However, as the Vaal Reefs plant incorporated the addition of these two additives, the plant was commissioned as designed.

During the first week trouble-free operation was experienced and only the normal diuranate crud formation was encountered in the strip stages which was easily dispersed by the addition of 10 per cent sulphuric acid to the mixers. Crud carried over to the O.K. liquor storage was treated in the same manner and the resulting solvent was reclaimed and returned to the extraction stage without any deleterious effect. This crud formation, therefore, constituted no serious problem.

When, however, the scrub additives were discontinued due to mechanical failure of a pump, crud of a different nature was encountered, which proved to be a more complex problem. This crud had a fibrous structure with a tawny colour and would, unlike the diuranate crud encountered previously, not respond to the usual acid treatment. Furthermore, the organic phase reclaimed from the O.K. liquor at this stage seemed to aggravate the problem in that massive crud formation occurred soon after the introduction of this material to the extraction stage. Conditions only reverted to normal when acid and ammonia were reintroduced to the scrub stage. As a precautionary measure, reclaimed organic phase from the O.K. liquor storage was routed through the regeneration section before re-use. This problem recurred whenever trouble was experienced in controlling the relatively low acid flow of less than 11 litres/minute. Conditions were only restored to normal when a steady flow of acid was obtained through the installation of a steady-head tank.

As mentioned earlier, pilot plant work did not indicate the necessity of using scrub additives and it is believed that some plants still operate satisfactorily without these reagents. The occurrence of siliceous crud in the absence of sulphuric acid and ammonium hydroxide at Vaal Reefs is probably due to a high silica concentration in the pregnant solution resulting from the high leach temperature of 65°C.

It can be concluded, therefore, that in order to obtain effective scrubbing, especially as regards silica removal, the scrub additives sulphuric acid and ammonia are absolutely essential. Even plants with lower silica values should derive benefit from this procedure.

A. Faure: Mr Meyburgh is to be congratulated on a very interesting paper, which gives a comprehensive account of the design and operation of a Purlex plant. I am sure that the information contained in this paper will be of great interest to the people concerned with the operation of the other Purlex plants in South Africa.

I have some comments to make.

Firstly, with regard to the question of anti-static precautions. It appears that the stainless steel earthing strips in the pipes are a nuisance. In view of the fact that the solvent has such a high conductivity (in the acid form the conductivity is a million times that of pure paraffin), no earthing strips should be needed. Any static generated by flow through the pipe would be dissipated by a flow of current through the solvent.

The author states that the use of an ammonium hydroxide-sulphuric acid scrub aggravates the problem of crud formation. This is contrary to our experience on the pilot plant, where we found that a very efficient scrub would help to reduce crud formation in the stripping section. It probably did increase crud formation in the scrubbing section, but all the crud formed there eventually found its way into the extraction section, and did not interfere with the strip at all. However, most people would agree that crud formation is very unpredictable and it would be interesting to hear the views of other Purlex plant operators on this point.

The author mentions that it was found advantageous to by-pass the scrub aqueous solution from the fourth stage to the second stage. Is this now standard practice at Buffelsfontein? Does the very low aqueous flowrate in the third scrubbing stage not lead to operational difficulties? Perhaps Mr Meyburgh could describe this in more detail.

T. H. Tunley: Mr Meyburgh mentions that 'the importance of optimum solvent loading is often over-emphasized'.

A study of the operating data of the local Purlex plants, confirmed by a calculation of the ammonium hydroxide required for the neutralization of the basic amine, enables a graph to be drawn that demonstrates the effect of solvent loading on the uranium lost in the raffinate and also on the consumption of ammonium hydroxide.

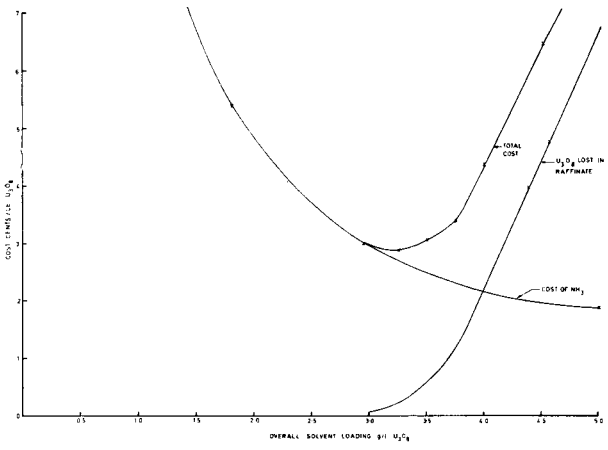

It can be seen that the amount of ammonium hydroxide used is inversely proportional to the solvent loading. The uranium lost in the raffinate increases rapidly as the loading is increased. The summation of these curves then shows a definite minimum. It is thus important to maintain a constant solvent loading. It is clear that a low solvent loading is almost as undesirable as a high solvent loading.

A. R. F. Macdonald (Associate): Mr Meyburgh is to be congratulated on the thorough treatment of his subject. Buffelsfontein Gold Mining Company Limited has pioneered solvent extraction processes for the South African uranium industry, first with the Bufflex pilot plant, and subsequently with the pilot and full-scale Purlex plants. Although some plant features and theories presented might be debated at length, I expect that Mr Meyburgh's paper will in future be referred to quite often by Purlex plant supervisors. The paragraphs dealing with economics, plant control, materials of construction and safety are especially informative.

The Harmony Gold Mining Company's Bufflex plant bears some resemblance to the Buffelsfontein pilot plant and has been in successful operation since mid-1967. Our new Purlex extraction section, however, has several interesting features that might be considered unconventional. The final design has evolved from closed circuit tests of various types of mixers and mixer-pumps.

Excellent solvent savings achieved overseas with impressed phase mixer/pumps motivated the development

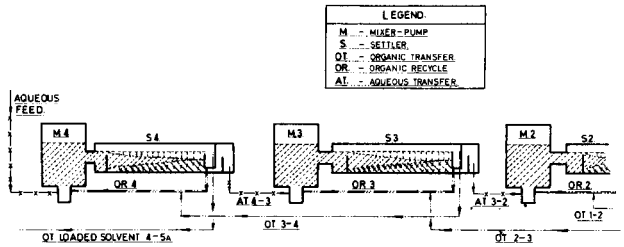

of the Harmony Purlex 'Mumps'. Basically similar systems are said to be operating with total solvent losses of ca. 80 and 50 p.p.m. at a copper plant in Baghdad and a uranium plant in central Africa, respectively. The Harmony mump consists of an 8 ft diameter mixer tank and a 6 ft diameter double shrouded turbine impeller with eight curved 8 in. deep vanes. Organic and aqueous feeds converge in a 30 in. by 30 in. cylindrical mixing chamber and rise through the 30-in. eye of the turbine which revolves at 34 to 49 r.p.m. These speeds represent tip speeds of 640 to 925 ft/min and also conform with $N^3 d^2 \leqslant 20$, where N = rev/sec. and d = impeller diameter in feet. Provision has been made for the fitting of three vertical baffles in the mixer tank if additional mixing is required for metallurgical efficiency. Pumping capacity at 49 r.p.m. is ca. 3 500 g.p.m. (Imp.) of mixed phases, well in excess of the 2 500 g.p.m. requirement at an organic : aqueous ratio of 1 : 1.

Four-stage extraction is to be practised. Besides instrumentation and by-pass valve arrangements the total equipment involved on extraction comprises only four variable speed 'mumps' and four rectangular settlers, all on the same level. Raffinate and loaded solvent are transferred by Kestner pumps. The existing Bufflex scrub, strip and regeneration sections will be used. Re-cycling and transfer of all liquids within the extraction section are accomplished by the suction of the 'mumps'. Throughput tonnages are set to match feed flowrates by adjustment of 'mump' speeds. Organic re-cycle flowrates are adjusted manually.

A fifth identical mixer/settler unit will be used for the recovery of amine and iso-decanol from the raffinate. Fresh paraffin will be 'mumped' through this 'gleaner' unit in organic continuous emulsion with the raffinate. Total loss of organic phase is not expected to change, but a considerable reduction in amine and iso-decanol loss might be effected because the organic phase will contain a lower concentration of these materials. A continuous test gleaner plant operating on Bufflex raffinate achieved average recoveries of 87 per cent of the amine from raffinates exceeding 8 ppm amine before gleaning (based on assay values). In plant practice an 80 per cent recovery from raffinate containing 10 ppm amine would glean 136 lb amine per day, i.e. roughly R80 per day, besides iso-decanol recovery. Although the target for amine loss before gleaning is below 10 ppm, the gleaner is also a safeguard against malfunction in both the solvent extraction and pregnant solution clarification sections. Gleaning would recover both entrained reagents and reagents coating suspended solids. The process is analogous with carbon tetrachloride stripping in the amine loss assay, but more efficient, due to the favourable organic : aqueous ratio.

Solvent losses on the plant will be made good by opening the gleaner organic circuit until the shortfall in the surge tanks has been compensated. The volume involved should be between 3 000 and 8 000 gallons per month and the period between 'bleeds' would be between 20 and 60 days, depending on total solvent loss. Reagent

concentration would also be adjusted during the make-up shift. The gleaner would then be re-charged with fresh paraffin. The gleaner unit can serve either as a standby extraction stage or as a fifth extraction unit. In the closed organic circuit of the gleaner, traces of uranium extracted from the raffinate accumulate, and, by the time solvent is drawn from the system, its loading could be between 1.0 and 2 g/litre, enhancing the U_3O_8 recovery by ca. 50 kg per month.

Simplicity of design and standardization of equipment have a significant effect on the inventory of standby machinery and spare parts, substantiating the late Professor Low's adage, 'Simplicate, and add much lightness'.

I would like to thank the management of the Harmony Gold Mining Company Limited for permission to publish this contribution.

P. J. Lloyd and Miss P. J. Hall: We would like to take this opportunity of congratulating the author on his most thorough presentation of the extensive operating experience which has been obtained on the Purlex plant at Buffelsfontein. It must not be forgotten that this was the first plant of its type in Southern Africa, and one of the largest in the world. He has barely touched on the few problems of the start-up of this plant. This, we feel, is in itself a tribute to the years of hard work on the pilot plants that preceded the erection of this plant, and to the excellence of the design engineering that went into it.

It is over ten years since laboratory work indicated the possibility of solvent extraction replacing ion exchange on South African uranium plants. At that stage, the chief fear was that solvent loss could not be contained within economic limits when treating the very low grade pregnant solutions available. It is of interest to compare the loss figure predicted[1] on a basis of limited laboratory tests and those obtained at Buffelsfontein.

Costs of solvent loss, in cents per lb U_3O_8:

Item	*From Ref. 1**	*From this paper, Table V*
Paraffin	1.53	1.488
Amine	2.53	2.064
Iso-decanol	0.39	0.100
Solvesso-150	—**	2.160

* Adjusted to the same basis as the Buffelsfontein results, i.e. for a pregnant solution containing 0.26 gm U_3O_8/l.

** No Solvesso addition was considered in the laboratory study see below.

It is pleasing to note that the costs of the loss of amine and paraffin, which were felt to be a reasonable target on the basis of very small scale tests, have been reduced slightly in full scale practice. However, the growth of fungus in the system has required the introduction of an aromatic constituent as a third-phase inhibitor in place of iso-decanol, and this has increased the total cost of solvent loss significantly. We wish to outline some of the work on this fungus that has been undertaken at the Chamber's Research Laboratories during the past four years.

Slimy, grey-white masses of fungal growth have been observed on the majority of Purlex plants within a year of commissioning. The origin of the fungus is almost certainly from the air, as it does not occur elsewhere in the circuit. Microbiological isolations have revealed virtually only one organism in both the aqueous and the organic phases. This organism is a slow-growing mould with a white vegetative mycelium and greenish sporing areas. It is an Aspergillus species, probably related to but not identical to *Aspergillus fumigatus*. The plant material, on microscopic examination, shows a rather distorted structure typical of fungi growing in unusual environments. Pure cultures show some of this type of structure, although much of the growth is of the normal Aspergillus type with typical vegetative and sporing structures.

The first method of control attempted was by means of selective fungicides. The flow rate of the aqueous phase is too high to allow introduction of a water-soluble fungicide at reasonable cost, so a search was made of possible organic-soluble fungicides. Over 12 were tested, but none met the requirements of —

(i) high organic and low aqueous/phase solubility,
(ii) effectiveness in the aqueous phase,
(iii) compatibility with the extractant.

Periodic sterilization was next attempted. Regular plant shutdowns, with removal of massive growth and introduction of heat, SO_2 or sodiumpentachlorphenate, has been tried. While this measure has reduced the rate of fungal growth, it has not proved entirely successful.

It was observed that the fungus was utilizing iso-decanol and other oxygenated constituents of the solvent. In the laboratory, replacement of the paraffin – 2 per cent iso-decanol mixture by paraffin – 20 per cent heavy aromatic white spirits (*haws*) effectively prevented growth, but chemical tests showed it was necessary to add up to 35 per cent *haws* to prevent third phases. As mentioned in the paper, even this high concentration only slows the rate of growth of the fungus.

A promising method of control is removal of oxygen from the pregnant solution. Laboratory tests have indicated that fungal growth is greatly reduced under conditions of low oxygen supply. Further tests are being undertaken to provide confirmation of these observations. Unfortunately, however, this method of control, if successful, would only be applicable to those Purlex plants employing mixer-settlers which can be isolated from the atmosphere.

Thus at present it appears as if the fungus is likely to remain a problem and to lead to increased solvent and operating costs. Periodic clean-up of plant is, however, an established routine, which was necessary in resin plants also.

The second part of our contribution deals with the design of mixer-settlers. The Buffelsfontein plant has what might be termed the 'classic' design, with one phase gravitating down the cascade and the other phase pumped. Re-cycle is also by pumping. Overseas practice has tended to employ the pumping effect of the mixer impellers to reduce the number of pumps required and to simplify the design of the foundations for the mixer-settlers. It is not so simple to do this satisfactorily under South African conditions, where low solvent losses must be ensured and high re-cycle volumes are required in the extraction section.

The majority of large-scale designs employed for combining interstage and intrastage transfer of phases with mixing have used positive suction to draw the individual phases into the mixer, which then discharges by gravity. This has the disadvantages of:

(i) not permitting control over the phase ratio during the primary mixing process, which could lead to local inversion of the continuous phase, and thus to increased solvent loss, and
(ii) interaction of the various flows, which can lead to oscillations in any one of the flows, and to poor control over the re-cycle rate.

The way to overcome these difficulties is to gravitate the individual flows into the mixer and to pump the mixed phases. This idea was first introduced on the scrub section of the pilot plant at Buffelsfontein, where the blades of the impellers in the mixers were angled downwards towards an outlet near the bottom of the mixer. This was satisfactory on the 75 cm mixers employed, but further theoretical studies of the pumping effect showed that the maximum effect attainable was directly proportional to impeller tip velocity. For Purlex extraction section purposes this velocity is fixed at 3.8 m/sec (750 ft/min),[2] at which the maximum head is only 15 cm. This head is too low to provide pumping at an aqueous flow rate of the order of 5 000 l/min into a 200 cm diameter mixer, for which heads of the order of 60 cm are required.

To overcome this, a high-efficiency, mixed-flow impeller enclosed in a volute was mounted below the mixer and driven by the mixer impeller shaft, as shown in Fig. 1. Tests on passing mixed phases through a conventional centrifugal pump had previously shown that the shearing forces were such as to create emulsions difficult to break. Consequently solvent loss was high. In contrast, samples of the mixed phases after passing through the low-speed, mixed-flow pump described above actually broke faster than samples taken from the mixer itself.

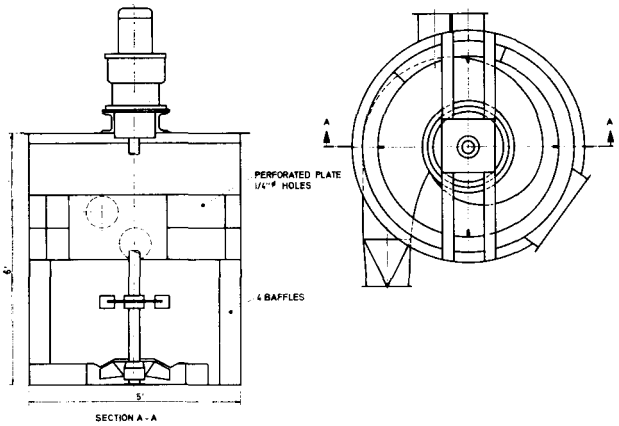

Fig. 1—The design of the Dimpi mixer

Tests were carried out on a single 150 cm mixer and associated 10 m long settler at Harmony Gold Mining Co. Ltd. The results of the tests indicated no increase in solvent loss compared to previous tests using conventional means of phase transfer. The head attained when pumping mixed phases was within 10 per cent of that predicted for the pumping of pure aqueous phase, and was sufficient to pump over 6 400 l/min (1 400 g.p.m.) of mixed phases. This idea has been incorporated in the design of the West Driefontein uranium plant, which we hope will bear out the promise of the test results in due course.

REFERENCES

1. LLOYD, P. J. Solvent extraction in the South African Industry. *J. S. Afr. Inst. Min. Metall.*, Vol 62, 465–80, March 1962.
2. TUNLEY, T. H., FAURE, A., VILJOEN, E. B., and VAN HEERDEN, D. J. Design and operation of a Purlex plant. *Atomic Energy Board Report No.* **4**, Project C1/61.0, March 1968.

E. J. Dominy*: The author is to be commended on an informative and instructive paper, and on his meticulous approach to ultimate quality control. Reference to this paper will undoubtedly simplify our own efforts in this direction, when we have overcome the more immediate problems of increasing plant capacity.

With regard to the desirability of limiting solids in suspension in clarified solution to less than 20 p.p.m., it has been our finding, during a period of poor clarification, that the extraction section could tolerate 50 p.p.m. without obvious crud formation. Another interesting fact is that we are unable to show correlation between daily solvent loss and daily solids in suspension during the past five months.

Mr Meyburgh has not elaborated on clarification as practised at Buffelsfontein – I am sure that some detail as to method, efficiency and cost, would be useful to new producers. Our experiences in this field may be of interest.

Blyvooruitzicht Gold Mining Company, Limited, commissioned its uranium plant during December, 1969, and within two months handled rated tonnages. Flow-rates through the Purlex plant have, however, not yet approached planned levels due to clarification imponderables. Despite this, extraction has been up to expectations and uranium concentrates of fairly high purity.

Clarification prior to solvent extraction is by means of Stellar Filters, each unit of which is a pressure vessel divided into body and head compartments. Attached to the division plate are the filtering elements, or candles, wound in our case with polypropylene at 0.076 mm spacings. Filter-aid is used as a pre-coat only, or may also be injected during the operating cycle. A cycle is considered complete when either body pressure has risen, or flow-rate declined, to pre-determined standards. At this stage the adhering solids are automatically removed from the candles by the techniques known as autopacting and back-washing, after which the whole process is recommenced.

As background to the selection of the Stellar filter for clarification of acid solution, the gold plant is equipped with 14 units, seven each on clarification and precipitation of cyanide solution. In these applications the adaptation of the Stellar filter is probably one of the most notable advances in metallurgical simplification and improved gold security. Extension of this principle to the clarification of solution deriving from sulphuric acid dissolution of uranium has, however, transformed a straightforward physical separation into an expensive scientific conundrum. Among the ranks of the bewildered we number at least three laboratories, four filter-aid specialists (whose livelihood depends on selling their product), several talented theoreticians, plus all the practical experience we have been able to concentrate on the problem. To date, a large store of information under the general headings of laboratory experiments, hypothesis, plant-scale fact, prophecy and straw-clutching has been accumulated, with only a fractional improvement in performance.

Uranium plant design specifications allowed for the clarification of roughly 450 g.p.m. equivalent to 0.49 g.p.m. per square foot of filtering area, a safety factor of approximately 15 per cent when compared with the known duty of gold plant Stellars. Cycle times were expected to be in the region of five hours. Average results for both plants are shown in Table I below.

TABLE I

	Solution filtered per sq. ft.	Cycle duration (hours)	Solution filtered per lb. filter-aid	Filter-aid cost per ton of solution filtered
Gold Plant	0.56 g.p.m.	7.40	5 066 gal.	0.285 cent
Uranium Plant	0.30 g.p.m.	1.65	424 gal.	3.410 cents

Filter Aids

The following types and grades of filter-aid, presented in Table II, have been used for various periods of time at a constant pre-coat dosage of 25 lb and solution flow rate of 0.5 g.p.m. per square foot.

TABLE II

Filter Aid	Type	Average running time (minutes)
Silflo 272	Perlite	45
Silflo 443	,,	54
Hiflo Supercel	Diatomite	58
Celite 550	,,	53
Silflo 443		20
85% Silflo 443 + 15% Asbestos fibre		20
50% Silflo 443 + 50% Asbestos fibre		25
100% Asbestos fibre		25

While there is some inclination to read significance into the different performances, one has to bear in mind that these are mean figures derived from a wide scatter of erratic results. Typical of the answers to numerous investigations is that obtained by comparing the two sets of tests using Silflo 443, where running times of 54 and 20 minutes were recorded. It is our conclusion that the only valid information provided by these trials is that all the filter-aids tested suffer from similar degrees of ineffectiveness.

Equally without correlation are the effects of various levels of solids in suspension in unclarified solution on both Stellar running-time and total solution through-put.

Consideration has also been given to possible degradation of filter-aid caused by (i) contact with sulphuric acid solution, (ii) violence of preparatory mixing, and (iii) extremes of pressure during the progress of the clarification cycle. In no case was cellular structure affected.

It is our normal practice to use a natural filter-aid, e.g. guar gum to assist acid pulp filtration, while at times a flocculant is required for mill pulp thickening. On the three occasions that a cationic polyacrylamide settling-aid was used, a fall-off in both gold and uranium plant clarification performance occurred. While no polyacrylamide was identified on the Stellar candles, we are nevertheless reasonably convinced that this was more than coincidence.

Micro-sizing and Analysis of Fines and Pulp

Acidulated pulp and solution samples have been microscopically examined and in all cases found to contain particles in the 2 to 5 micron range. In an attempt to identify these particles, their weight loss on ignition was determined. This was less than 3 per cent, indicating that the material was not organic. Qualitative analysis on the X-ray diffraction spectrograph indicated quartz as being the strongest mineral present. The presence of an hydrated calcium silicate is also suspected. Calcium sulphate concentration at 240 p.p.m. is not likely to be troublesome.[1]

Operating Techniques

Sundry modifications have been made to the operating cycle without spectacular success. Back-wash volumes and pressures were increased and automatic procedures, determined by cam-timers, superseded to allow variation in number and duration of washes. Flow-rates were also controlled at low levels for progressively increasing periods to study the likelihood of early filter-aid compression.

Examination of pump pressures on the Stellars indicated identical running times, at both 45 and 82 p.s.i. with a 12.9 per cent improvement in through-put at the higher pressure.

Routine washing of Stellars with strong caustic solution and manual scrubbing of filter elements provided, at times, a small temporary improvement in capacity.

Polypropylene socks were fitted initially, but tended to blind more easily than the candles and proved more difficult to clean. This was confirmed several times. They were, however, a useful back-stop to broken candle-windings.

A test-model Niagara filter was demonstrated and brought a ray of light. Basically different from the Stellar in its recirculation of portion of the unclarified solution to avoid pressure build-up, this unit produced a constant flow-rate over a 2-hour period. A similar by-pass system was fitted to the test-Stellar and pressures maintained at a low level, but in all tests flow-rate dropped by 50 per cent within 30 minutes. It was then decided that the success of the Niagara test unit was probably related to the heavy dosage of both pre-coat and body filter aid.

The most promising results to date have indeed been obtained with the injection of filter-aid during the operating cycle. Previous work indicated a 5 per cent improvement but it is now thought that some mechanical shearing of filter-aid occurred in the centrifugal pump used for the injection. Although reliable results are not yet available, improvements of between 70 per cent and 120 per cent in running time have been noted using a variable speed Mono pump. This is still a far cry from the anticipated 5-hour cycle and low-cost clarification, but it is at least a measurable advance.

I have stressed the shortcomings and the lack of reproducible, or even predictable, data in this contribution, and would emphasize that our three Stellars are hard-pressed production units and interference with their operation for thorough, step-by-step evaluation, would result in loss of production. In essence, there are three observations that define the problem and might characterize our efforts as an exercise in futility.

(1) Rotary filters handling an alkaline cyanide pulp are two to three times more efficient than the same filters operating on sulphuric acid pulp. This is almost analogous to the solution clarifying situation.
(2) Clarification of acid solution has proved troublesome through the range of sand-bed, leaf, ion-exchange columns and now Stellar clarifiers.
(3) A pre-coat of 25 lb is equivalent to 37 grams per square foot of candle area. A 20-minute run at 100 g.p.m. and clarifying from 120 p.p.m. to 20 p.p.m. will leave an additional solid residue of only 2.9 grams on each square foot of candle area. This minute quantity has been sufficient to produce an almost impermeable, plastic-like film, that can at times only be removed manually.

In conclusion, I must explain that while our persistence in this matter is stimulated by its complexity, the dubious economics involved in the change-over to any other modern clarification system, and the uncertainty of success in our application, is the essential motivation towards solving the problem.

REFERENCE

1. Corner House Laboratories Ref. C.4587/P114/70.

* Metallurgical Superintendent, Blyvooruitzicht Gold Mining Co. Ltd.