J. S. Afr. Inst. Min. Metall., vol. 85, no. 11.
Nov. 1985. pp. 387-394.

The recovery of gold from plant solutions by use of a countercurrent moving carbon bed

by R.J. DAVIDSON*, W.D. DOUGLAS†, and J.A. TUMILTY‡

SYNOPSIS

Two pilot plants operating on different types of carbon were used to generate steady-state adsorption data in the treatment of gold-plant solutions of high and low tenor.

A pilot plant comprising three 4 m long columns and using 3 mm extruded activated carbon was used to treat pregnant solutions with a gold concentration of 5 to 8 g/t at pH 10 to 11,5. Column influent was pumped at a superficial flow velocity of 0,5 m/min while the carbon was moved daily so as to effect gold loadings on the carbon of 5 to 10 kg/t. With a carbon-bed depth of 12 m, an adsorption efficiency of 99,9 per cent was obtained in a bed depth of 9 m, which was subsequently reduced to 8 m when the depth of the carbon bed was reduced to 8 m. This improvement in efficiency was attributed to the reduced residence time of the carbon from 12 to 8 days. A corresponding decrease in adsorbed silica indicated that some silica fouling of the carbon had occurred.

A second pilot plant, comprising a single column 6 m in length and using coconut-shell carbon of 1,0 to 2,4 mm, treated a solution with a gold concentration of 0,7 g/t at pH 8,0. Feed solution was pumped at a superficial flow velocity of 1,0 m/min while carbon was moved every 8 hours to give gold loadings of more than 5 kg/t. An adsorption efficiency of 99,5 per cent was indicated at steady state. Intermittent washing of the column with dilute hydrochloric acid was shown to have a beneficial effect on the gold adsorption and to reduce the pressure drop across the column. Intermittent washing with dilute sulphuric acid indicated that there had been some passivation of the carbon during the treatment of a solution with a gold concentration of only 0,2 g/t.

Compared with other adsorption systems, the countercurrent moving bed appears to offer significant advantages in terms of metallurgical efficiency and capital investment. The inability normally associated with moving-bed systems to treat solutions containing suspended solids may be overcome to a degree by the use of relatively coarse extruded carbon.

SAMEVATTING

Twee proefaanlegginge wat met verskillende soorte koolstof werk, is gebruik om bestendige adsorpsie data in verband met die behandeling van goudaanlegoplossings met 'n hoë en lae goudkonsentrasie te ontwikkel.

'n Proefaanleg, bestaande uit drie 4 m-lange kolomme wat van uitgeperste geaktiveerde koolstof van 3 mm gebruik maak, is gebruik om pregnante oplossings met 'n goudkonsentrasie van 5 tot 8 g/t by 'n pH van 10 tot 11,5 te behandel. Die kolominvloeisel is met 'n oppervlakvloeisnelheid van 0,5 m/min gepomp, terwyl die koolstof daagliks beweeg is ten einde goudladings van 5 tot 10 kg/t op die koolstof te kry. Met 'n koolstofbeddiepte van 12 m is 'n adsorpsiedoeltreffendheid van 99,9 persent in 'n beddiepte van 9 m verkry, en dit het later tot 8 m afgeneem toe die diepte van die koolstofbed tot 8 m verminder is. Hierdie verbetering in die doeltreffendheid is toegeskryf aan die verkorting van die koolstof se verblyftyd van 12 tot 8 dae. 'n Ooreenstemmende afname in die geadsorbeerde silika het aangedui dat daar 'n mate van versperring van die koolstof deur die silika plaasgevind het.

'n Tweede proefaanleg, bestaande uit 'n enkele kolom met 'n lengte van 6 m wat van kokosneutdopkoolstof van 1,0 tot 2,4 mm gebruik maak, het 'n oplossing met 'n goudkonsentrasie van 0,7 g/t by 'n pH van 8,0 behandel. Die toevoeroplossing is met 'n oppervlakvloeisnelheid van 1,0 m/min gepomp terwyl die koolstof elke 8 uur beweeg om goudladings van meer as 5 kg/t te gee. 'n Adsorpsiedoeltreffendheid van 99,5 persent is met 'n bestendige toestand verkry. Daar is getoon dat sporadiese was van die kolom met verdunde soutsuur 'n voordelige uitwerking op die goudadsorpsie het en die drukval oor die kolom verlaag. Sporadiese was met verdunde swaelsuur het getoon dat daar net tydens die behandeling van 'n oplossing met 'n goudkonsentrasie van 0,2 g/t 'n mate van passivering van die koolstof was.

Vergeleke met ander adsorpsiestelsels bied die teenstroom-bewegende bed blykbaar beduidende voordele in terme van metallurgiese doeltreffendheid en kapitaalbelegging. Die gewone onvermoë van bewegendebed-stelsels om oplossings met gesuspendeerde vaste stowwe te behandel, kan in 'n mate oorkom word deur die gebruik van betreklik growwe uitgeperste koolstof.

Introduction

With the advent of the carbon-in-pulp process in the South African gold-mining industry, considerable attention has been focused on the treatment of plant solutions and effluents with activated carbon. Such circuits as dam return water, uranium-plant primary filtrate[1], and dump leach liquors are currently receiving serious consideration. As the technology involved in the treatment of such solutions is currently very much in a state of development, numerous circuits have been considered.

Because of the complex confounding effects of numerous parameters on the adsorption of gold onto activated carbon from plant solutions and effluents, no simple formula can be used in the design of a recovery circuit. Very often a compromise must be made in terms of both the chemistry and the engineering of the system, while in most instances realistic design data can be obtained only after lengthy and costly pilot-plant operation. It is nevertheless necessary for the effectiveness of cer-

* Senior Research Fellow.
† Head of Metallurgical Laboratory.
‡ Manager, Metallurgical Research.
All the above of Anglo American Research Laboratories, P.O. Box 106, Crown Mines, 2025 Transvaal.
© The South African Institute of Mining and Metallurgy, 1985.
SA ISSN 0038-223X/$3.00 + 0.00. Paper received 22nd October, 1984.

tain operational parameters to be assessed before a particular plant design can be chosen. The options include individual stages of fixed or fluidized beds of carbon arranged in a countercurrent circuit, or the use of fixed or fluidized stages contained in a single column.

Carbon contacting is normally carried out in a system of one or more columns. Three principal modes of operation can be used: expanded-bed upflow, fixed-bed downflow, and countercurrent moving bed. The design and mode of operation of a contacting circuit depend largely on the clarity of the solution or effluent, together with the gold content. Such characteristics define to some degree the particle size of the carbon, the contact time, the gold loadings, and the choice of a steady-state as opposed to a non-steady-state type of operation.

Expanded-bed Upflow

In this mode of operation, the pregnant effluent or solution enters the bottom of the column and leaves from the top. The carbon bed, in an expanded form, remains in the column until suitably loaded, at which time the carbon is removed for elution and regeneration. This mode of operation is especially useful for the treatment of unclarified effluents and when the clarity of the product water is of no concern. No significant filtration is effected, which may be a disadvantage if water reclamation is anticipated. The backwashing of stages is normally not required.

The specification of the number of stages in series is an integral part of the process design of an expanded-bed or fixed-bed mode of operation. As such staged systems cannot normally be operated to yield equilibrium gold loadings, there is an under-utilization of the capacity of the carbon. This, however, may be an important advantage if fluctuating gold values are encountered in that the second or third stages will contain a substantial amount of active carbon. Such adsorption circuits are normally operated in a typical carousel mode in order to promote the efficiency of the countercurrent adsorption.

The process design of both the expanded-bed upflow and fixed-bed downflow systems is most complex because of the non-steady-state modes of operation.

Fixed-bed Downflow

This mode differs from the expanded-bed mode only in that the process solution is passed from the top to the bottom through the column, and that the carbon bed is compacted. Accordingly, a substantial filtration effect is obtained. Furthermore, because of the static nature of the carbon bed, a strong chemical driving force is maintained in each stage, which is most desirable.

The fixed-bed mode of operation is therefore best suited to the treatment of clarified solutions or where water reclamation is anticipated.

Countercurrent Moving Bed

In this mode of operation, process water enters at the bottom of the column and leaves from the top. Fresh carbon is fed intermittently in slugs to the top of the bed, while loaded carbon is similarly discharged from the bottom. To minimize the mixing of carbon in the column, the carbon bed is normally not expanded. This system, applied to the recovery of gold rather than to the treatment of wastewaters, is the subject of the current investigation.

Pilot Plants

In the investigation described here, two pilot plants were used in which carbon was periodically slugged in and out of the system in a moving-bed type of operation. Pilot operations were carried out at the Western Deep Levels Gold Mine (WDL) and at Vaal Reefs Exploration & Mining Co. Ltd (VREM), in which different clarified plant solutions and types of carbon were used.

Plant A

The object in this investigation was to demonstrate efficient gold adsorption at relatively high flow velocities by the use of a coarse (3 mm) extruded carbon. The use of this carbon had demonstrated the feasibility of pumping a conventional gold-plant pulp containing 40 to 50 per cent solids through a single column in a 'pinned-bed' countercurrent moving-column type of operation[2]. This demonstration had suggested a similar treatment for unclarified gold-plant solutions and effluents, which would obviate clarification costs.

The pilot plant comprised three Perspex columns in series (each column being 50 mm in internal diameter and 4 m in length) in which slugs of carbon were moved countercurrently from one column to the other to simulate a single moving-bed column (Fig. 1). The carbon was moved intermittently by the volumetric discharging of a discrete bed depth of carbon from each column via a ball valve and the respective columns were refilled while maintaining the profile of a single adsorption column. The carbon used throughout the operation was 3,0 mm type RB3 extruded activated carbon (Norit Activated Carbon, Amersfoort, Netherlands).

Clarified pregnant solution was stored in a constant-head tank (1 m^3 capacity) and pumped into the columns by a diaphragm metering pump. Solution was fed to the plant at a rate of 1,0 l/min, corresponding to a superficial flow velocity of 0,5 m/min in the columns.

A profile of gold in solution was obtained daily from sample points placed at 1 m intervals down the bed. Samples were taken progressively down the column starting from the barren solution to the feed solution so that the solution profile would be disrupted as little as possible.

The column operated continuously save for brief interruptions while the carbon was moved. A defined downtime of 0,5 hour was allowed for moving the carbon. Each phase in the investigation involved at least 2 to 4 weeks so that steady-state adsorption data could be generated.

Plant B

The investigation on Plant B was used to generate design data for the proposed moving-bed column to treat clarified leach liquors from the No. 3 waste-rock dump project at WDL. The project entailed the conversion of the existing leaching and countercurrent-decantation circuits of the uranium plant to recover gold from milled waste rock at the No. 3 Shaft. The pilot operation was launched as a joint venture between WDL and Anglo American Research Laboratories.

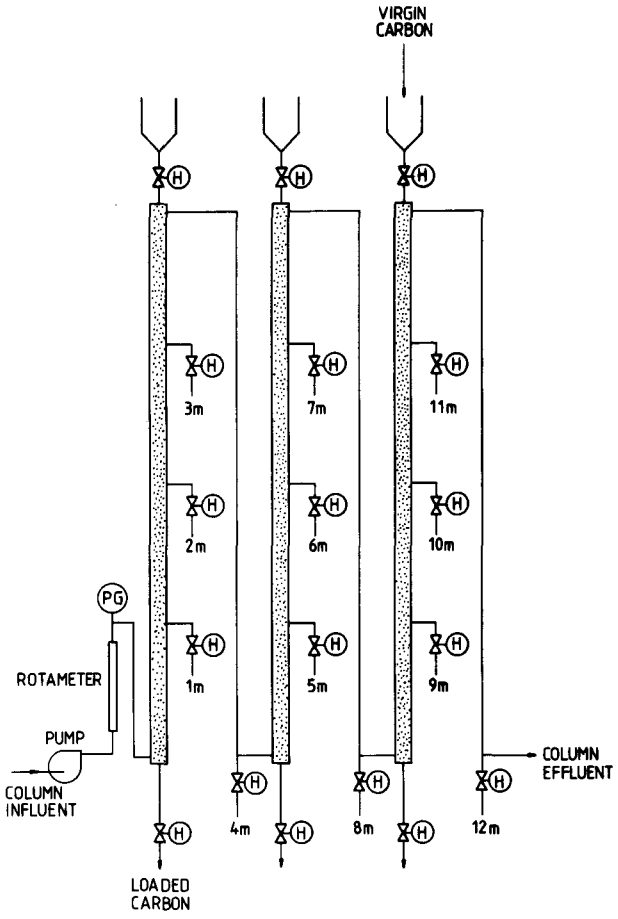

Fig. 1—Pilot plant A

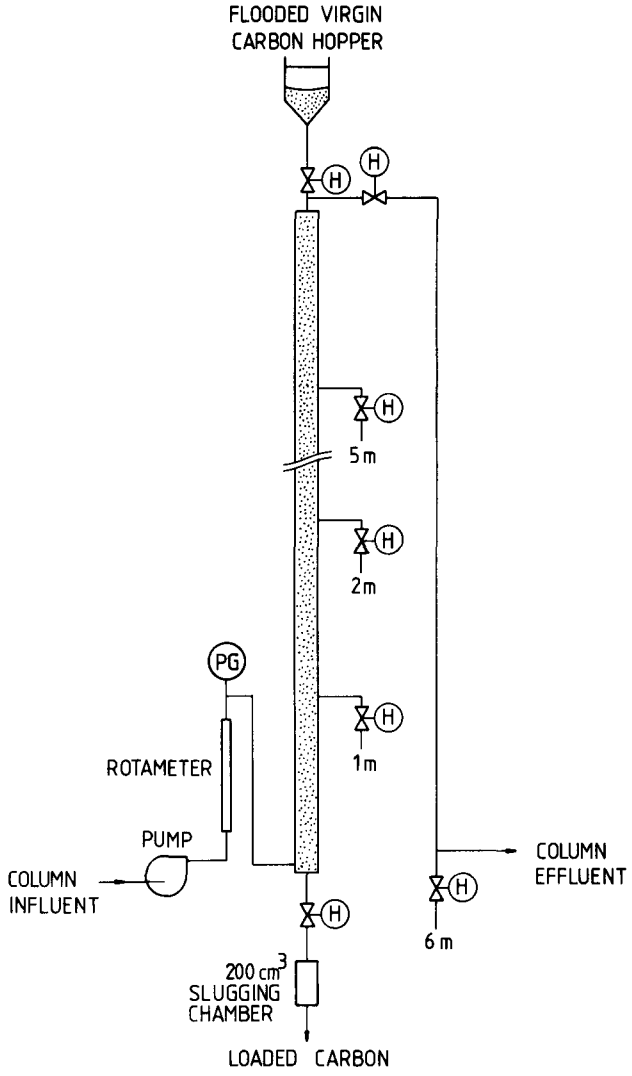

Fig. 2—Pilot plant B

The pilot plant consisted of a single Perspex column having an internal diameter of 50 mm and a length of 6 m. Carbon was fed into the top of the column via a flooded hopper, and was slugged periodically from the base of the column via a small 200 cm^3 slugging chamber fitted with an 850 μm screen. Fig. 2 illustrates the flowsheet of the circuit. Use was made of 1,0 to 2,4 mm Type G210-AS coconut-shell activated carbon (Le Carbone (Pty) Ltd) throughout the operation so that the particle size of the carbon in other proposed carbon circuits at WDL could be standardized.

Unless otherwise specified, clarified gold-plant pregnant solution was suitably diluted with Merrill barren solution so that its gold concentration was 0,7 g/t. This solution was stored at pH 10,5 in an 80 m^3 storage tank in which the content of free cyanide was adjusted periodically to a sodium cyanide concentration of 100 g/t. The pH value of this solution was then lowered to pH 8,0 by use of an automated titrimeter and 10 per cent sulphuric acid (by volume) in an in-line 200-litre agitated tank prior to being pumped to the column. A diaphragm metering pump was used to pump the solution at a flowrate of 1,96 l/min, which corresponds to a superficial flow velocity of 1,0 m/min in the adsorption column.

As before (Plant A), a profile of gold in solution was obtained daily from sample points corresponding to each metre of carbon in the column. As the movement of the carbon was effected in less than 10 minutes, the operational time was 98 to 100 per cent. Each phase in the investigation involved at least 2 to 3 weeks of continuous operation so that steady-state adsorption data would be obtained.

Only clarified solutions were used as column influents so that stable flowrates would be maintained by the diaphragm metering pumps. For this reason, the effect of suspended solids on the operation of the prescribed pilot operations could not be assessed.

Results Obtained on Plant A

Phase I

Gold-plant solution from WDL with gold and sodium cyanide concentrations of approximately 5 g/t and 150 g/t respectively (pH 10 to 11,5) was used as the column influent. The plant was operated for 5 days with no carbon movement so as to allow an initial adsorption profile to form. Subsequently, 2 litres of carbon, equivalent to a bed depth of 1 m, were moved daily.

Although the solution data are perhaps of more general interest, the adsorption data are presented in Table I in terms of progressive percentage recoveries so that they can be compared easily. From these data it can be seen

that the plant reached steady state in a relatively short time, maintaining a gold front of 0,005 g/t (99,9 per cent recovery) within 9 m for the initial 19,6 operating days. As the last 4 m of carbon in the circuit was shown to be adsorbing very little gold, the total bed depth of carbon in the circuit was reduced from 12 to 8 m (only 2 columns) in the subsequent 8,8 days of operation. This shortening of the circuit, which reduced the carbon residence time from 12 to 8 days, appeared to have a beneficial effect since the 0,005 g/t gold front was subsequently maintained in the 8 m long circuit. (During that time, the adsorption data presented in Table I indicate a slight decrease in gold adsorption in the first 6 m carbon, the improved performance of the remaining 2 m of freshly added carbon being clearly evident.)

Carbon loadings for the period under review are presented in Table II, which gives gold loadings of 6 to 9 kg/t, silver of 1 kg/t, copper of 1 kg/t, calcium of 9 to 12 kg/t, and silica of 13 to 18 kg/t. While the rather inconsistent gold loadings are due partly to fluctuations in the gold content of the feed solution (Table I), the decrease in silica loadings from approximately 18 to 13 kg/t towards the end of the operation (days 24 to 28) may well be significant. This decrease in silica may explain to some degree the improved gold adsorption resulting from the shorter carbon residence time after 19,6 operating days.

Phase II

Pregnant solution from the gold plant at VREM South Division was used as column influent. It had a gold concentration of approximately 8 g/t and a sodium cyanide concentration of 200 g/t (pH 10 to 11,5). Based on the experience gained in the WDL exercise (Phase I), the depth of carbon bed was 8 m (only 2 columns). So that steady state would be approached in a shorter time, this phase was started with the same carbon profile in the column as that at the completion of Phase I. As before, 2 litres of carbon, equivalent to a bed depth of 1 m, were moved daily through the circuit.

The daily recoveries are shown in Table III, from which it can be seen that relatively good steady-state data were achieved while the gold front was maintained at 0,003 g/t (99,96 per cent) within 7 m. Since it took at least 8 days for a complete change in carbon inventory, this is the minimum operating time before the column can be

TABLE I
PROGRESSIVE PERCENTAGE GOLD RECOVERY FROM PLANT A AT WDL (PHASE I)

Operating time d	Gold in column influent g/t	Depth of carbon bed, m									
		1,0	2,0	3,0	4,0	5,0	6,0	7,0	8,0	9,0	10,0
4,0	3,78	38,62	70,11	90,90	90,06	98,94	99,68	99,87	99,97	99,97	99,97
5,0	5,02	46,02	74,66	93,57	97,85	99,49	99,85	99,93	99,98	99,98	99,98
5,9	5,14	41,73	70,77	88,56	95,75	98,48	99,51	99,78	99,93	99,97	99,98
6,9	5,50	35,62	64,94	82,89	92,51	97,04	99,10	99,66	99,89	99,96	99,98
7,9	5,44	41,04	69,56	87,06	93,79	97,72	99,36	99,81	99,93	99,97	99,98
8,9	5,40	41,61	74,63	89,94	94,90	98,31	99,55	99,85	99,96	99,98	99,98
9,7	5,48	41,54	75,09	88,93	94,64	98,03	99,50	99,81	99,94	99,98	99,98
10,8	4,80	41,73	72,86	86,63	94,61	97,66	99,24	99,76	99,90	99,97	99,98
11,7	4,78	41,02	75,57	85,34	93,38	96,76	98,65	99,51	99,78	99,77	99,98
12,7	4,34	41,45	73,68	83,77	90,04	94,95	97,55	98,95	99,54	99,85	99,95
13,7	4,38	37,39	65,71	80,28	88,39	93,81	96,72	98,47	99,35	99,74	99,91
14,6	4,42	36,36	66,02	81,93	90,95	95,34	97,78	98,97	99,58	99,86	99,94
15,6	4,38	31,36	66,36	82,73	90,45	95,39	98,28	99,23	99,72	99,90	99,97
16,6	4,96	31,91	64,88	81,05	89,06	94,99	98,00	99,16	99,73	99,89	99,96
17,6	5,10	38,37	65,61	81,81	90,46	95,73	98,21	99,32	99,77	99,92	99,97
18,6	4,98	38,89	67,56	84,52	91,87	96,23	98,51	99,41	99,75	99,92	99,98
19,6	5,12	39,01	67,82	85,45	92,57	96,44	98,65	99,50	99,81	99,95	99,98
Average	4,88	39,04	69,76	85,61	92,78	96,78	98,72	99,47	99,80	99,93	99,97
Depth of carbon bed reduced from 12 to 8 m											
20,6	4,98	39,90	69,80	86,24	93,56	97,28	99,02	99,66	99,89		
21,6	5,08	43,14	72,56	86,66	93,94	97,89	99,39	99,88	99,98		
22,5	5,12	44,71	72,45	85,78	93,24	97,51	99,43	99,90	99,98		
23,5	5,30	40,21	69,77	84,84	93,41	97,76	99,62	99,94	99,98		
24,3	5,54	28,69	56,27	71,22	82,87	91,75	96,95	99,30	99,88		
25,4	5,26	20,37	49,91	61,02	78,98	88,54	95,68	98,94	99,78		
26,4	5,30	25,95	61,84	75,76	91,42	95,38	98,45	99,57	99,88		
28.3	5,38	30,99	65,07	85,67	96,10	99,00	99,76	99,93	99,98		
Average	5,25	34,24	64,71	79,68	90,44	95,64	98,54	99,64	99,92		

TABLE II
CARBON LOADING DATA FROM PLANT A AT WDL (PHASE I)

Operating time d	Carbon loading, kg/t				
	Au	Ag	Cu	Ca	SiO_2
5,0	12,3	0,8	1,0	10,1	19,7
6,9	14,7	0,8	0,9	10,1	19,9
7,9	11,9	1,3	1,0	9,0	18,4
8,9	10,2	1,2	1,1	8,8	18,8
9,7	9,4	1,0	1,1	8,7	18,4
10,8	10,2	1,2	1,0	9,0	18,4
11,7	9,3	1,2	1,0	9,5	18,8
12,7	9,4	1,2	1,0	7,4	14,3
13,7	8,4	1,2	1,1	9,7	18,8
14,6	7,5	0,7			
15,6	8,0	1,1	1,0	9,8	17,5
16,6	7,4	1,2	1,1	10,7	17,2
17,6	7,2	1,0	1,0	11,2	17,9
18,6	7,2	0,9	0,9	10,8	17,5
19,6	7,6	1,0	1,0	12,9	17,5
Depth of carbon bed reduced from 12 to 8 m					
20,6	7,8	1,0	1,0	19,6	17,9
21,6	7,1	1,1	1,1	14,9	17,5
22,5	5,1	0,8	0,8	9,7	17,9
23,5	6,8	1,0	1,1	12,5	17,2
24,3	6,8	1,0	1,1	11,6	14,8
25,4	5,7	0,8	1,0	10,3	13,4
26,4	6,5	0,8	1,0	12,3	14,3
28,3	11,1	1,1	1,2	12,2	13,6

TABLE IV
CARBON LOADING DATA FROM PLANT A AT VREM (PHASE II)

Operating time d	Gold loading kg/t
1,0	10,5
2,0	9,2
2,9	9,7
3,9	12,2
4,9	10,8
5,9	9,7
6,9	10,4
7,8	11,2
8,8	11,2
9,8	11,8
10,8	11,4
11,8	15,4
12,7	15,0
13,7	12,5
14,7	10,2

TABLE III
PROGRESSIVE PERCENTAGE GOLD RECOVERY FROM PLANT A AT VREM (PHASE II)

Operating time d	Gold in column influent g/t	Depth of carbon bed, m							
		1,0	2,0	3,0	4,0	5,0	6,0	7,0	8,0
1,0	8,38	58,23	84,49	97,46	99,16	99,98	99,89	99,98	99,99
2,0	7,35	42,28	70,76	91,97	99,14	99,84	99,94	99,97	99,99
2,9	8,67	38,58	69,29	90,26	98,63	99,71	99,88	99,97	99,99
3,9	8,27	47,87	76,98	92,84	97,58	99,55	99,85	99,98	99,99
4,9	6,98	43,08	75,61	91,72	97,02	99,50	99,86	99,97	99,99
5,9	6,65	41,60	76,60	91,49	97,30	99,61	99,89	99,96	99,99
6,9	7,07	43,73	73,91	90,38	97,33	99,59	99,93	99,96	99,99
7,8	8,33	45,00	75,32	91,30	97,13	99,54	99,91	99,96	99,98
8,8	6,60	45,55	76,96	92,57	97,49	99,56	99,88	99,96	99,98
9,8	7,86	45,99	77,59	92,46	97,65	99,35	99,83	99,94	99,99
10,8	8,19	45,79	76,20	92,21	97,62	99,40	99,84	99,95	99,99
11,8	7,60	44,14	72,45	91,07	97,77	99,61	99,91	99,97	99,99
12,7	7,13	40,94	65,51	87,78	97,49	99,52	99,88	99,97	99,98
13,7	7,27	39,17	61,88	84,72	97,33	99,45	99,87	99,96	99,97
14,7	7,66	39,92	64,17	84,66	96,42	99,17	99,78	99.92	99,95
Average	7,60	44,12	73,18	90,86	97,67	99,55	99,88	99,96	99,98

considered to have reached steady state. Hence, the data from days 9 to 15 can be regarded as representing steady-state conditions. During this period, consistent gold loadings of 10 to 11 kg/t were obtained (Table IV), while the gold-loading profile based on solution-adsorption data also indicated a very high chemical driving force: loaded carbon = 10,9 kg/t, 1 m = 6,1 kg/t, 2 m = 3,2 kg/t, 3 m = 1,2 kg/t, 4 m = 0,29 kg/t, 5 m = 0,06 kg/t, 6 m = 0,01 kg/t, 7 m = 0,002 kg/t, and 8 m = <0,001 kg/t.

Results Obtained on Plant B

During the course of the investigation, there were two tenors of gold in the bulk solution fed to the column so that gold loadings on the carbon of more than 5 kg/t could be demonstrated. While a gold concentration in

solution of 0,7 g/t was considered to be the expected average feed value for the large-scale operation, a gold concentration of only 0,2 g/t was considered to represent the lowest gold value likely to be encountered. Likewise, while the concentration of free cyanide in the column influent of the large-scale operation was difficult to forecast because considerable decomposition of cyanide was likely to take place in the countercurrent-decantation circuit, a free-cyanide level of 100 g of sodium cyanide per ton was considered to represent the highest value likely to occur.

Phase I

A bulk solution with a gold concentration of 0,7 g/t and a sodium cyanide concentration of 100 g/t was used as column influent. At regular intervals during each 8 hour shift, i.e. 3 times daily, 200 cm^3 of carbon (equivalent to a bed depth of 0,1 m) was slugged in and out of the column. The resulting adsorption data corresponding to each metre of carbon in the column, together with the daily composite carbon loadings for the period under review, are presented in Fig. 3 and Table V respectively.

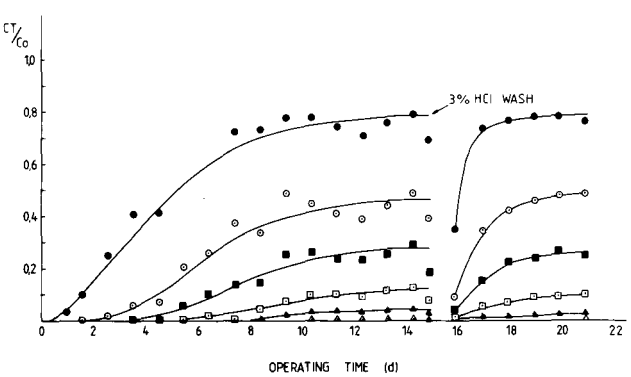

Fig. 3—Gold-adsorption data from pilot plant B (Phase I). C_T = gold concentration in effluent at specified depth of carbon bed; C_o = gold concentration in column influent; adsorption curves correspond to each metre of carbon in the circuit as follows:

● = 1 m o = 2 m ■ = 3 m
□ = 4 m ▲ = 5 m △ = 6 m

After 15 days of continuous operation with the plant approaching steady state, the following carbon loadings were obtained: gold 5,1 kg/t, silver 0,5 kg/t, copper 17 kg/t, nickel 3,3 kg/t, zinc 21 kg/t, and calcium 5 kg/t (Table V). At that stage, the circuit was treated with acid, 3 per cent hydrochloric acid (by volume) being pumped for 10 minutes to alleviate a blockage in the circuit. (A build-up of calcium carbonate precipitate in the storage tank was thought to be responsible.) The acid treatment[1] had a marked effect in lowering the pressure drop across the column and in improving the gold adsorption, the gold loadings increasing to 7 kg/t for the remaining 6 days of the test period. This effect, which obviously upset the steady state of the circuit and the loading profile, is well illustrated in Fig. 3. The increase in gold loading was also accompanied by a decrease in the loading of copper (13 kg/t), zinc (13 kg/t), and calcium (1,6 kg/t).

TABLE V
CARBON LOADING DATA FROM PLANT B AT WDL (PHASE I)

Operating time d	Carbon loading, kg/t					
	Au	Ag	Cu	Ni	Zn	Ca
1,6	3,91	0,38	4,2	2,6	8,0	2,7
3,5	5,07	0,50	7,4	3,2	10,0	3,4
5,5	4,87	0,50	12,0	3,1	12,9	3,1
7,5	5,14	0,51	17,0	3,5	15,0	4,2
9,4	4,89	0,48	16,8	3,5	22,1	4,0
11,4	5,21	0,50	17,0	3,3	22,1	4,0
13,3	5,32	0,50	17,1	3,2	20,8	3,8
14,3	5,79	0,53	13,5	3,1	20,5	4,5
15,0	6,41	0,53	10,4	3,1	9,8	3,4
3% HCl wash						
15,9	7,04	0,57	11,8	3,1	8,6	1,9
17,0	7,15	0,58	13,6	3,4	11,8	1,7
18,0	7,22	0,51	13,7	3,2	14,9	1,6
18,9	7,09	0,55	14,0	2,9	16,5	1,9
19,9	7,35	0,58	11,5	2,7	14,9	1,9
20,9	7,71	0,59	12,1	2,8	9,4	0,8

Gold recoveries during this test period (an operating time of 21 days) exceeded 99,5 per cent, the gold barren values of 0,002 to 0,003 g/t being at steady state.

Phase II

After Phase I had been completed, a bulk solution with a gold concentration of 0,2 g/t and a sodium cyanide concentration of 100 g/t was used as the column influent. As before (Plant A), in order to approach steady state in a shorter period of time, this phase was started with the same carbon profile in the column as that at the completion of Phase I. Carbon equivalent to a bed depth of 0,1 m (200 cm^3) was slugged in and out of the column at regular intervals (only every 24 hours) to effect a gold loading on the carbon of approximately 5 kg/t. The column was washed with acid every 24 hours. For the first 9 days of operation, the acid wash entailed the pumping of 3 per cent hydrochloric acid (by volume) for 3 minutes, followed by a 5-minute soaking period prior to normal operation. This was subsequently changed to the pumping of the same strength of sulphuric acid for 3 minutes, followed by a soaking period of 5 minutes for a further 9 operating days. The adsorption data and daily carbon loadings are shown in Fig. 4 and Table VI respectively.

From the adsorption data obtained for the first 8,4 operating days, a gradual decrease in overall gold recovery can be noted as the system approached steady state. Although the adsorption curves (Fig. 4) are difficult to extrapolate, a gold recovery in the region of 95 per cent and yielding a barren solution with a gold concentration of approximately 0,01 g/t is suggested at steady state. A slow fall-off in gold loadings could be expected since the carbon was being moved at a slower rate in order to effect a loading of 5 kg/t (Table VI). There was an increase in the copper loading to about 20 kg/t, together with marginal increases in the nickel and zinc loadings.

While the effect of the stronger acid addition during the following 9 days in improving the gold recovery was immediately evident (Fig. 4), the longer-term effect of the

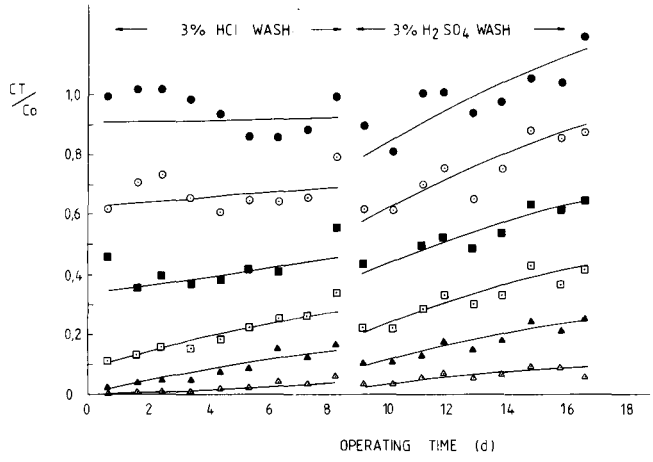

Fig. 4—Gold adsorption data from pilot Plant B (Phase II). The designations of the individual adsorption curves are similar to those in Fig. 3

TABLE VI
CARBON LOADING DATA FROM PLANT B AT WDL (PHASE II)

Operating time d	Carbon loading, kg/t					
	Au	Ag	Cu	Ni	Zn	Ca
Daily 3% HCl wash						
0,7	7,56	0,60	14,2	3,3	9,7	2,0
1,7	7,49	0,46	11,0	3,0	9,3	3,6
2,5	7,11	0,41	10,8	3,3	8,1	3,1
3,5	7,06	0,51	12,0	3,6	8,4	3,5
4,4	7,19	0,50	12,9	3,8	9,8	3,8
5,4	6,28	0,38	15,8	4,2	13,6	4,5
6,4	6,26	0,43	19,2	4,8	13,1	4,5
7,4	6,48	0,40	20,3	4,7	12,6	4,0
8,4	6,92	0,69	13,7	4,3	11,6	3,3
Change to daily 3% H_2SO_4 wash						
9,27	6,42	0,70	22,9	5,1	15,5	4,6
10,25	5,86	0,63	21,8	4,9	7,8	4,8
11,23	5,94	0,64	23,6	4,9	7,3	4,6
11,96	6,09	0,65	24,9	5,1	6,3	4,4
12,94	6,01	0,65	22,5	4,5	6,6	4,2
13,92	5,83	0,66	27,0	5,3	8,1	13,8
14,90	5,71	0,66	26,4	5,2	6,4	11,5
15,88	5,57	0,65	21,3	5,1	5,4	4,9
16,72	5,29	0,62	18,0	4,8	3,2	4,9
16,85	5,70	0,65	17,9	4,9	2,1	8,0
17,41	6,05	0,69	21,1	4,8	1,1	36,8
17,93	5,07	0,57	15,2	4,9	1,5	9,5
18,43	5,05	0,61	12,9	4,4	1,4	14,1

sulphuric acid treatment indicated some degree of carbon passivation. This was accompanied by significant increases in the calcium loadings, together with decreases in the zinc and copper loadings (Table VI). The very significant increase in the silver loading, possibly indicating a high recovery, should be noted. This is almost certainly due to the insoluble character of silver sulphate.

Discussion

In general, the results obtained with the moving carbon bed indicate several important aspects of the recovery of gold from plant solutions. First and foremost is the exceptional metallurgical efficiency that was obtained with relatively high flowrates of influent: the barren values were low, and the gold loadings were high. (The solution contact time in the 6 m column was only 2,4 minutes on the assumption of a carbon voidage of 40 per cent, while that in the 8 m column was 8 minutes on the assumption of a voidage of 50 per cent.) These features are significant in reducing both the size and the capital and operating costs in any proposed carbon circuit. The approach of the system to a true countercurrent operation with a steep loading profile through the circuit as the result of a strong chemical driving force is undoubtedly responsible for the efficiency observed. The hold-up of bullion, which may constitute a considerable indirect cost in a circuit where carbon mixing takes place, or where long carbon residence times are required, can also be expected to be reduced in a moving-bed adsorption circuit.

The critical nature of the carbon residence time in a gold-adsorption circuit is particularly interesting. Owing to the heterogeneous nature of the gold adsorption from plant solutions (and pulps) and the considerable carbon fouling that occurs progressively through the circuit, it can be expected that carbon residence times are critical. This was admirably demonstrated in Plant A, where the depth of the carbon bed was reduced from 12 to 8 m, with a resultant improvement in metallurgical efficiency. This aspect is often overlooked in plant designs that use one or two stages more than are required. In many instances, these extra stages may well be counterproductive. This investigation also indicated that adsorbed silica may be partly responsible for the carbon fouling that was observed. Such fouling by silica is particularly difficult to monitor in a pulp circuit for obvious reasons, and can be expected to increase significantly at high pH levels.

As very rapid kinetics are generally common to such adsorption circuits, it can be expected that the particle size of the carbon plays a most important role. However, because of such high adsorption rates, relatively high flowrates of influent are possible, thus making the selection of particle size a compromise between the chemical and the physical restraints of the system. This may be particularly important in the processing of unclarified plant solutions, or of effluents in which the clarity of the influent and the rate and regularity at which the carbon is moved play an important role. A comparison of the data from Plants A and B, which treated plant solutions of different tenors and used carbons at different particle sizes and flowrates, shows that good metallurgical efficiency was achieved in both instances. Plant A used a coarse (3 mm) extruded carbon and a slow flow velocity (0,5 m/min), which an be expected to successfully treat an unclarified solution of high tenor such as gold-plant primary filtrate. On the other hand, where further clarification is expected, the use of a finer carbon and high flow velocities (1 m/min) as in Plant B are suggested.

In most carbon-in-pulp operations in which the loading of gold is not allowed to approach equilibrium, film diffusion predominates in limiting the rate of gold extraction. Under such conditions, physical aspects such as mix-

ing, pulp density, carbon particle size, and carbon concentration play a most significant role[3], and are likely to overshadow any chemical considerations. Conversely, in an adsorption circuit such as the moving bed, where the loading of gold may well approach equilibrium, the rate of extraction decreases, and therefore any factor that influences the loading capacity has a bearing on plant performance under these conditions. In a plant situation, such variables as pH, cyanide concentration, and even temperature are likely to play an important role. The high gold loadings obtained in Plant B in the treatment of plant solutions of low tenor at pH 8, and the large effect of the acid wash, indicate to some degree the sensitivity of the system to such changes.

From a practical point of view, both the lowering of influent pH by the use of sulphuric acid and the intermittent acid washing of the column with dilute hydrochloric acid must be carefully considered. While both procedures undoubtedly improve the metallurgical efficiency, such improvements must be off-set in terms of the cost of the acid. This assessment is not easy since both procedures also have a considerable effect on the physical operation of the system owing to the build-up of calcium carbonate in the column. In Plant A, where no acid was added and where a coarse extruded carbon was used, the build-up of calcium carbonate was often visually excessive but appeared to have little effect on either the metallurgical efficiency or the physical operation of the plant. Conversely, earlier column operations using finer coconut-shell carbons[4] had indicated the occurrence of severe calcium passivation of the carbon, and even physical cementing of the carbon, in the columns during the treatment of conventional plant solutions. These observations suggest that the relatively large pore-size distribution of the extruded carbon is not nearly as susceptible to fouling by calcium as is the coconut-shell carbon with its fine pores. Of course, the higher pressure drop across a column containing the finer coconut carbon would also induce more calcium carbonate to precipitate.

Of adsorption systems for the treatment of plant solutions, the greater metallurgical efficiency and lower carbon dosage (bullion lock-up) offered by the moving-bed circuit are the most significant of its advantages. Other advantages offered by the moving bed include the following.

(a) It usually requires a lower capital investment.
(b) It requires less space, which is a key consideration when a system is to be added to an existing gold plant.
(c) It can be tightly controlled so that the quality of the effluent is close to the specification value, which is a most important consideration in the treatment of gold-plant solutions.
(d) The short time required to approach steady state in the moving-bed system makes the piloting and design relatively simple.

The greatest disadvantage of the moving-bed absorber is that it is not emptied in normal operation, and inspection and/or repairs can therefore be carried out only by the taking of an adsorber off-line and emptying the entire carbon content into temporary containers. The other disadvantage normally associated with moving-bed systems treating wastewaters is their inability to treat influents containing suspended solids, and some prefiltration is generally required. However, in gold adsorption, where the fast kinetics allow for high rates of carbon movement, the frequent slugging of carbon (and collected solids) from the circuit, together with the use of a relatively coarse carbon, may well circumvent this problem.

Acknowledgements

This paper is published by permission of the management of the Anglo American Corporation. The contributions of Messrs J.W. Chandler, M.P. Hallewell, G. Nicholson, A.W.G. Reeve, and B.S. Tatterson in the pilot-plant operations are gratefully acknowledged. The single 6 m pilot-plant operation (Plant B) was a collaborative project between Western Deep Levels Gold Mine and Anglo American Research Laboratories. The contribution and co-operation of the Vaal Reefs Exploration & Mining Company (South Division) for the Plant A operation is gratefully acknowledged, as is the funding of the project by the Gold Division of the Anglo American Corporation.

References

1. DAVIDSON, R.J., and STRONG, B. *J. S. Afr. Inst. Min. Metall.*, vol. 83, no. 8. 1984. pp. 181–188.
2. DAVIDSON, R.J., and LOVEDAY, B.K. *S. Afr. Patent* no. 82/8866.
3. FLEMING, C.A., and NICOL, M.J. *J. S. Afr. Inst. Min. Metall.*, vol. 84, no. 4. 1984. pp. 85–93.
4. DAVIDSON, R.J., VERONESE, V., and NKOSI, M.V. *Ibid.*, vol. 79, no. 10. 1979. pp. 281–297.