J.S. Afr. Inst. Min. Metall., vol. 91,
no. 8. Aug. 1991. pp. 257-265.

The Prieska experience: Flotation developments in copper–zinc separation*

by B.R. BROEKMAN† and D.W. PENMAN†

SYNOPSIS

This paper traces the developments in flotation practice at Anglovaal's Prieska Copper Mine, with emphasis on the depression/deactivation of lead and zinc. A depressant system was devised to accept feed material that was once regarded as untreatable.

Of particular interest is the long-term downward trend of concentrator working costs in real terms. This trend follows the classic *Experience Curve*, which relates production costs to cumulative experience. It is felt that the experience-curve concept has important implications for the mining industry in general.

SAMEVATTING

Hierdie referaat skets die ontwikkelinge in flotasie praktyke tot op datum. Die depressie/deaktivering van lood en sink word beklemtoon. Die huidige depressie sisteem laat die konsentreeraanleg toe om erts te behandel wat vroeër onbehandelbaar was.

Van besondere belang is die langtermyn afwaartse neiging van die aanleg se bedryfskostes in reële terme. Hierdie neiging volg die klassieke *Ondervinding-kromme* wat bedryfskostes met kumulatiewe ondervinding in verband bring. Die gevoel is dat die ondervinding-kromme-konsep belangrike implikasies vir die mynbou industrie as 'n geheel inhou.

Process Description

The Prieska Copper Mine lies some 60 km southwest of the town of Prieska in the Cape Province. Commissioning started in 1972 and built up to design tonnage (240 kt per month) over the next two years. The minerals of economic interest in the orebody are chalcopyrite, sphalerite, pyrite, galena, and molybdenite. Of these, neither the molybdenite (0,005 per cent molybdenum) nor the galena (0,08 per cent lead) were recoverable at a profit; the pyrite, which is floated fairly easily from the zinc tailings, is recovered when there is a market. The metallurgical process therefore centres on the separation of chalcopyrite from sphalerite.

Run-of-mine ore, reduced to minus 200 mm in an underground gyratory crusher, passes via a 9 kt stockpile to a screening and crushing plant, which supplies grinding media for the pebble mills and crushed ore to the rod mills. Crushing is by two 84-inch Hydrocone crushers in parallel with automatic control based on pressure and motor amps.

The mill and flotation section consists of two independent units in parallel, followed by common treatment of the products. Each unit (Fig. 1) comprises a rod mill followed by two pebble mills. Rod-mill feed is from fines bins via slot feeders and variable-speed conveyors, a system that works very well. Each pebble mill is in closed circuit with four 500 mm cyclones, the combined overflows of which feed the copper-flotation plant.

The zinc tailings are cycloned, thereby taking over 50 per cent of the load off the tailings thickeners. The thickener and cyclone underflows are pumped together to the tailings dam. Pyrite, when recovered, was floated from the cyclone underflow. Only one cleaning stage was needed to give a 50 per cent sulphur concentrate, which was pumped direct to concrete evaporation pads.

The copper and zinc concentrates are thickened (four 18,3 m thickeners per concentrate) and filtered on disc filters of 1,8 m diameter with duties of 7,3 and 6,4 t/m^2 per 24 hours for the copper and zinc respectively. The filtered concentrates are sun-dried on concrete pads to between 5 and 7 per cent moisture content before being despatched, mostly by rail.

With the invaluable gift of hindsight, we make the following comments on the general design.

- The crusher plant was designed for dry screening to avoid the possible adverse effects of spray water on the flotation response of the fines. Whether or not such fears were justified can be debated, but dry crushing certainly resulted in intractable dust problems in the mill and crushers.
- Open-circuit crushing made close control of the sizing of the rod-mill feed virtually impossible, and the high proportion (10 per cent) of plus 25 mm material was a major, if not the major, cause of rod tangles.
- The original two-stage cyclone system in the mill, with gravity feeding of the primary overflow to the second stage, was altered to a single-stage system to alleviate pumping problems. Ironically, the classification also improved, the pumps having been undersized for the original duty.
- Similarly, the technically correct use of conditioners ahead of both copper and zinc flotation brought no

* Paper presented at the International Colloquium on Developments in Froth Flotation, which was held by The South African Institute of Mining and Metallurgy in Gordons Bay (Cape Town) in August 1989.

† Anglovaal Limited, P.O. Box 62379, Marshalltown, 2107 Transvaal.

ISSN 0038-233X/3.00+0.00.

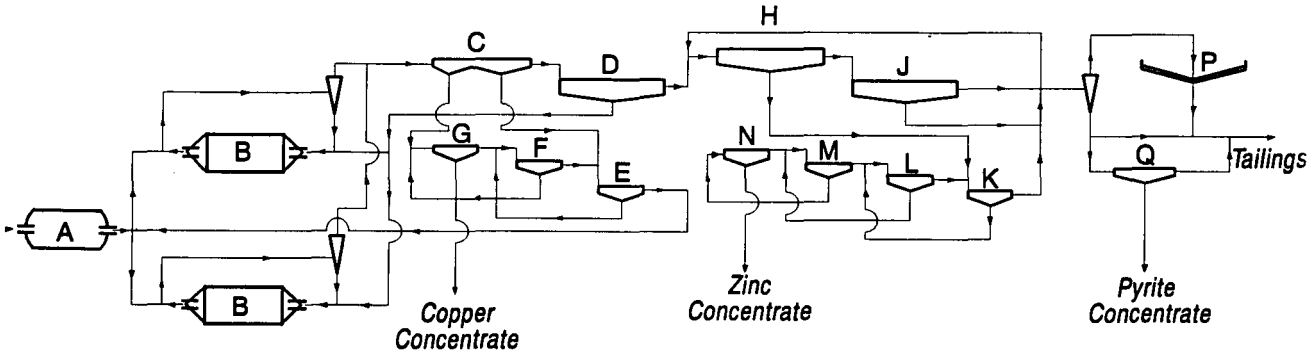

A 1 rodmill 2,9 x 3,8 m
B 2 pebble mills 4,3 x 7,3 m
C 28 copper roughers 3,2 m³
D 28 copper scavengers 3,2 m³
E 8 copper cleaners 1,4 m³
F 8 copper recleaners 1,4 m³
G 8 copper final cleaners 1,4 m³
H 40 zinc roughers 32 m³
J 44 zinc scavengers 32 m³
K 16 zinc cleaners 1,4 m³
L 8 zinc second-stage cleaners 1,4 m³
M 8 zinc third-stage cleaners 1,4 m³
N 4 zinc final cleaners OK3
P 4 tailings thickeners 18,3 m diam.
Q 8 pyrite flotation cells 32 m³

Note: All the flotation cells are Sala BFP except the final zinc cleaners

Fig. 1—The milling and flotation circuit at Prieska (all the flotation cells are Sala BFP except the final zinc cleaners)

benefit because of incessant mechanical problems with the conditioners, the shafts of which showed a regrettable tendency to buckle under load. The resulting spillage, when drained and pumped back into the circuit, upset the flotation.

- The copper and zinc cleaner-tailings thickeners failed to give the intended benefits of steadier flotation conditions, mainly as a result of sliming and settling problems. They were therefore used on the concentrates instead.
- The copper scavenger concentrates and cleaner tailings, both of which originally returned to the rougher heads, were diverted to the mill circuit. This gave a 1 per cent increase in the copper recovery. Separate regrinding circuits would have been better.
- Sampling of the head feed was a problem, with process streams returning to the mill. Samples of rod-mill effluent do not take into account the pebble tonnage, which is about 17 per cent of the total milled tonnage.
- There was no automatic level-control system on the flotation cells.
- Two independent mill/flotation units have some advantages, the main one being the opportunity for comparative testing. However, for reasons of capital and operating costs, we would now choose one unit.

Early Flotation Practice (1970s)

The plant started with calcium cyanide/zinc sulphate depression/deactivation of sphalerite at a pH value of from 6 to 7, maintained by additions of sulphuric acid. The copper concentrate was above specification for lead and bismuth, and was re-floated with enough cyanide and zinc sulphate to depress the chalcopyrite.

The resulting lead concentrate (typically 34 per cent

TABLE I
FLOTATION WITH LOW pH DEPRESSION

Date	Copper rougher pH	Relative density of dry feed	Head grade, %			Grade of Cu conct.* %			Distribution in final Cu conct., %		Pulp liquid-to-solid mass ratios		Grind −75 μm %	Zn in Zn conct.	Additions of depressant, g/t			
															Cu flotation		Pb flotation	
			Cu	Zn	Pb	Cu	Zn	Pb	Cu	Zn	Cu rougher	Cu cleaner tails			ABC as NoCN†	$ZnSO_4 \cdot 7H_2O$	ABC as NaCN†	$ZnSO_4 \cdot 7H_2O$
Jan 75	7,5	3,29	0,99	2,09	0,049	26,2	6,8	0,90	83,3	10,5	1,19	3,52	65,8	80,5	243	927	326	468
Feb 75	7,5	3,41	1,33	2,15	0,057	27,1	5,8	1,17	84,9	11,5	1,23	4,35	66,6	81,2	220	678	349	480
Mar 75	7,5	3,52	1,35	2,57	0,055	26,7	5,6	1,14	88,1	9,8	1,27	9,33	68,8	83,0	191	547	325	567
Apr 75	7,4	3,45	1,06	2,94	0,060	26,7	4,5	2,07	34,1	5,5	1,27	9,63	69,0	87,3	185	564	216	355
May 75	7,9	3,50	1,08	3,15	0,062	26,0	4,7	1,97	80,0	5,0	1,27	5,08	69,8	86,6	191	609	217	313
Jun 75	8,3	3,39	1,17	2,71	0,062	25,0	5,7	1,55	83,9	8,3	1,26	3,39	71,5	82,1	200	182	102	322
Jul 75	9,1	3,36	1,08	2,36	0,074	24,5	5,8		82,5	9,0	1,33	3,42	70,6	82,0	76	107	133	212
Aug 75	9,0	3,39	1,12	2,61		25,9	5,9	2,08	82,6	8,3	1,26	3,10	71,1	82,5	59	110	142	207
Sep 75	8,8	3,40	1,01	3,36	0,080	25,6	6,6	2,15	83,6	6,7	1,36	3,16	66,3	86,7	48	168	217	255
Oct 75	8,6	3,43	1,02	3,98	0,088	26,2	6,1	2,52	78,3	4,8	1,32	6,35	67,9	89,0	51	346	323	341
Nov 75	8,9	3,48	1,02	4,47	0,080	27,1	4,8	2,56	82,8	3,5	1,48	5,62	77,6	92,7	34	138	320	355
Dec 75	10,3	3,53	1,01	5,32	0,078	27,5	6,4	0,38	88,4	3,9	1,70	12,00	78,8	93,5				
Jan 76	10,1	3,53	1,22	4,91	0,078	25,5	6,0	0,35	88,7	5,0	1,84	6,18	77,9	91,8				
Feb 76	9,3	3,47	1,26	4,11	0,080	27,4	5,9	0,36	88,5	5,8	2,05	10,58	75,4	88,5				
Mar 76	10,0	3,46	1,23	3,23	0,070	27,6	5,6	0,35	87,9	6,7	2,16	9,58	72,8	87,5				
Apr 76	10,5	3,51	1,42	3,36	0,075	27,5	5,3	0,27	87,0	7,2	2,02	6,99	72,6	86,0				
May 76	10,5	3,46	1,27	3,22	0,076	26,5	5,6	0,28	89,6	7,5	2,01	6,29	72,9	86,2				
Jun 76	10,5	3,47	1,20	3,53	0,070	27,4	5,3	0,25	88,8	5,8	2,05	10,98	73,0	88,6				
Jul 76	10,2	3,46	1,35	3,32	0,088	26,7	5,9	0,22	88,2	4,2	2,16	10,14	69,1	83,3				
Aug 76	10,2	3,34	1,16	2,89	0,110	27,2	5,6	0,42	87,0	3,5	1,96	8,82	73,2	84,9				
Sep 76	10,3	3,42	1,34	3,14	0,084	28,0	5,4	0,25	87,8	4,2	1,99	11,76	72,5	85,4				
Oct 76	10,2	3,48	1,43	2,95	0,085	28,0	6,1	0,29	87,4	3,9	2,01	14,25	70,1	84,1				
Nov 76	10,2	3,48	1,47	3,09	0,076	28,0	4,9	0,20	88,1	3,7	2,01	6,33	73,0	84,2				
Dec 76	10,3	3,40	1,24	2,70	0,077	27,4	6,1	0,30	88,2	3,8	2,06	11,83	73,0	82,9				

* Before Pb float † ABC = Aerobrand cyanide

lead, 10 per cent copper, and 2 per cent zinc) was hard to sell and contained almost 2 per cent of the total copper in the ore. Flotation of the lead effectively reduced the copper recovery by 2 per cent (there was no payment for the contained copper), and the reagent consumptions were high (Table I).

During 1975, the pH value of the copper rougher was gradually increased with two marked effects.

- Lower additions of depressant were required.
- The lead content of the copper concentrate rose alarmingly.

Fortunately, and surprisingly, there was a narrow pH range (normally 10,0 to 10,5) in which galena was largely inactive so that, by floating at pH 10,3, not only could the lead float be shut down, but the addition of depressant was not required.

The trends are easily seen in Table I, although three other changes happened at roughly the same time: a drop in the pulp density of both the copper rougher feed and the cleaner tailings, and changes in grind. Also, late in 1975, the effect on the zinc flotation was complicated by the increase in the ratio of zinc to copper in the feed. From mass-balance considerations, given a relatively constant copper head grade and a fixed proportion of zinc in the copper concentrate, the zinc recovery (zinc in the zinc concentrate) is proportional to the percentage zinc in the feed. This was borne out by the plant data.

An improvement in the grade of the copper concentrate in mid-1977 coincided with an increase in the rate of collector addition (Table II).

The salient point here is that the reduction of collectors to keep zinc out of the copper concentrate can be overdone. The first requirement is to float copper; the second is not to float zinc. Too little collector means the first requirement is not met. We find in practice that, when too little collector is added, the operator tends to pull the cells faster to maintain the copper recovery. In the process, he entrains increased amounts of fine sphalerite, thereby reducing the copper grade. A better move is normally to increase the collector additions and to pull the cells slowly. Nobody ever said differential flotation is easy.

We also observed, during periods when the zinc head grade was low, that the zinc tailings can be reduced by increasing the circulating load from the cleaners. This is not an obvious strategy and, although it should be applied with some caution, is often successful. We speculate that, when it works, it is because there is insufficient floatable mineral in the new feed for a stable froth and a high proportion drops out in the cell. A sufficient return from the cleaner tailings is needed to restore the stability of the froth.

TABLE II
ADDITION RATES OF COPPER COLLECTOR

Period	SNPX* g/t	3477† g/t	Cu in Cu conct. %	Zn in Cu conct. %
Jul 76–Jun 77	8,1	10,3	27,6	5,9
Jul 77–Jun 78	12,3	11,6	29,1	4,2
Jul 78–Jun 79	5,6	12,1	29,9	4,5
Jul 79–Jun 80	3,0	8,3	29,3	5,6
Jul 80–Jun 81	6,2	12,3	29,7	4,5

* Sodium normal propyl xanthate
† Disodium disobutyl dithiophosphate

There was a brief, relatively unsuccessful return to cyanide/zinc sulphate depression/deactivation (April 1980 to March 1981) to counteract poor separation. Again, the rates of collector addition appear to have been significant.

High values of zinc in the copper concentrate (8 per cent on average from January to March 1980) led to the re-introduction of depressants, whereas part of the problem may well have been too little collector. When the depressants were stopped, the float stayed normal, with increased rates of collector addition.

Intermediate Flotation Practice (Early 1980s)

Economic Model

In gold metallurgy, efficiency is defined by the percentage gold recovered—a single parameter. At Prieska, there were four objectives: high copper and zinc recoveries and high concentrate grades. Since grade and recovery were negatively correlated in the plant operating range, it was difficult to know how best to run the plant. Furthermore, the metal prices, exchange rates, transport charges, and smelting costs varied, with obvious effects on the profitability.

The following equations, derived from 180 sets of daily results, formed the metallurgical basis of the model followed at Prieska:

$$\text{Cu recovery, \%} = 113 + 2{,}64\ (\text{Cu head value}) - 0{,}773\ (\text{\% Cu in Cu concentrate}) - 1{,}379\ (\text{\% Zn in Cu concentrate}) \quad \ldots (1)$$

$$\text{Zn recovery, \%} = 18{,}9 + 3{,}27\ (\text{Zn/Cu ratio in head}) + 2{,}22\ (\text{\% Cu in Cu concentrate}) - 48\ (\text{\% Cu in Zn tailings}) \quad \ldots (2)$$

$$\text{Zn in Zn concentrate, \%} = 40{,}2 + 0{,}966\ (\text{Zn head assay}) + 0{,}39\ (\text{\% Cu in Cu concentrate}). \quad \ldots (3)$$

These relations, along with the relevant financial parameters, showed that the best operating strategy was to maximize the grade of the copper concentrate. The resulting drop in copper recovery, as predicted by equation (1), was more than offset by the better zinc grade and recovery, and lower handling charges due to lower masses of concentrate. The model also became the basis for bonus payments to the operators.

Ore Dilution

Early in 1981, a sudden drop in the milling rate precipitated an investigation[1] into the mineralogical and mining factors that could affect performance. The results summarized here are interesting, if only to reinforce the truism that mining and metallurgy are two aspects of one process and not the separate activities they sometimes appear to be.

The problem facing the mine was that, by mid-1981, the milling rate was down from 250 to 235 kt per month, i.e. a production shortfall valued at R4 million per annum in 1981 money. The consumption of pebbles dropped, and frequent choking of the hoppers (up to 80 on some days) and

the bending of almost new rods showed that the rod mills were near the limit of their capacity. The milling capacity was found to correlate positively with the iron content which, in turn, was affected by the mining methods and ore dilution.

The effects of the ore dilution were complex. The chalcopyrite occurs mainly in association with pyrite. However, the high sphalerite areas tended to occur on the periphery of the orebody so that the zinc dilution was low in sulphur and iron, was harder to mill, and was lower in density.

Briefly, the investigation showed quantitatively, and in some detail, that excessive waste dilution caused milling problems through increased ore hardness and low relative density, particularly the regions where the orebody was high in zinc and the dilution was low in sulphides. The solution lay in selective mining and grade control, which could easily be monitored through measurements of the iron in the mill feed.

The effect of dry solid relative density on milling is often overlooked. Milling and crushing are in many respects volume, rather than mass, flow operations. Given a fixed pulp throughput in cubic metres per hour at a constant water-to-solid mass ratio *(W/S)*, a change in the dry relative density of the feed from d_1 to d_2 would, on flow considerations alone regardless of change in hardness, alter the mass throughput, T, in the ratio

$$\frac{T_2}{T_1} = \frac{d_2\ [1+d_1\ (W/S)]}{d_1\ [1+d_2\ (W/S)]}. \qquad (4)$$

For the Prieska rod mills, $W/S = 0{,}255$, so that a change of density from 3,45 to 3,35 would reduce the tonnage in the ratio 100 to 98,4. In closed-circuit pebble mills, the effects are even more pronounced.

Courier Analyser

August 1981 saw the commissioning of a Courier 300 on-stream X-ray analyser. Previously, the flotation control had been based on panning and chemical analyses of two-hourly composites, a system that worked surprisingly well with experienced operators. However, on-stream analysis offers obvious advantages, and the financial benefits of the Courier in 1987 were put at about R200 000 per month compared with R40 000 for maintenance.

Planned Maintenance

Although engineering maintenance is often a thorny topic, we mention it here because it had a significant influence in changing the direction of the working-cost curve from 1982 onwards.

Two changes took place. First, it was agreed that plant engineering would be the responsibility of the plant manager and, second, a planned maintenance scheme was introduced and made to work. This took the best part of two years, but the results were good, as clearly shown in Table III.

The success of the maintenance scheme depended as much on the personalities and attitudes of those involved as it did on the scheme itself. It allowed a reduction of labour and costs in the closing stages of the mine that would otherwise have been impossible.

Research on Depression of Sphalerite

Early research on the depression of sphalerite is described by De Kok[2] and Marais[3], and Anglovaal Research Laboratories (AVRL) and Mintek both did work on Prieska[4–6] ore. In addition, Finkelstein and Allison[7] reviewed the current understanding of the basic chemistry. They drew a distinction between deactivation, the removal of activating copper, and depression, and the formation of hydrophilic complex zinc precipitates in thick films on the sphalerite surface. Deactivation is not necessarily equated with non-floatability, and in depression the physical characteristics of the hydrophilic precipitate have an important effect on the process.

TABLE III
EFFECT OF THE INTRODUCTION OF PLANNED MAINTENANCE

Period	Unscheduled plant stoppages: No. per month	Unscheduled plant stoppages: Time lost per month h	Engineering cost / Metallurgical cost %
1981/82*	38	73	42
1982/83	38	75	43
1983/84†	51	72	37
1984/85	30	45	37
1985/86	36	46	38
1986/87	22	29	26

* Planned maintenance introduced in June 1982

† Planned maintenance operating effectively from April 1984

Initially, it was thought at Prieska that the depression of sphalerite was caused by $Zn(CN)_2$. Zinc sulphate and Aeroband cyanide solutions were added in roughly stoichiometric proportions (with a slight excess of zinc). The addition points varied (rod-mill feed, effluent, flotation feed), and at times the zinc and cyanide were premixed or at other times added separately. Cyanide addition alone did not prevent sphalerite from floating with the chalcopyrite.

As investigation by Mintek continued on the flotation chemistry, it appeared that the depressing agent at high pH was a basic zinc sulphate. Shortly thereafter, as already mentioned, depression/deactivation was abandoned and no more work was done on this aspect on the mine till much later. Later, in the 1980s, work by AVRL formed the background for the most recent, successful depression/deactivation flotation developments at Prieska[8,9].

Late in 1984, it became obvious that the mine's closure was imminent. The capital expenditure was cut, and the ore grades declined. Only the fortuitous benefits of a declining rand exchange rate, together with real working-cost reductions, kept the mine alive, and the emphasis on cost reduction virtually put a stop to flotation development work on the mine.

From 1984 onwards, the ore grades and quality deteriorated significantly, as shown in Table IV. The ore became progressively harder, and the mining operations increasingly returned to old mined-out areas to recover ore that had broken off the side walls of stopes over the years. This material tended to be somewhat oxidized and therefore difficult to float by the current process. Also, the reduced flexibility of the mining operations, together with the tendency to mine from many different areas of the mine, resulted in a greater fluctuation in ore head grades from shift to shift.

TABLE IV
SELECTED CONCENTRATOR OPERATING VARIABLES

Period	Average monthly throughout kt	Ore head grade, %			Cu final concentrate, %	
		Cu	Zn	Fe	Cu	Zn
Jul 84–Jun 85	244	1,09	3,08	14,1	29,3	5,0
Jul 85–Jun 86	231	0,99	2,64	14,3	29,4	5,4
Jul 86–Jun 87	232	0,92	2,35	12,7	29,5	5,5
Jul 87–Dec 87	212	0,82	2,17	12,6	29,7	6,1

It was quite normal by late 1987 for the dry density of the ore fed to the concentrator to vary by as much as 17 per cent within a 4-hour period. This variation in ore quality was too much for the Digicon peak-seeking power controllers installed on each of the pebble mills, and often resulted in mill overloads. It took a few hours for the overloaded pebble mill to return to a normal load, and on occasions it was necessary to stop the mill to tip the load or replace a torn seal at the inlet end. The milling instabilities, obviously resulted in flotation instabilities, with decreased flotation efficiencies.

The reduced selectivity in the copper-flotation stage motivated a number of small but significant changes. The primary copper collector was changed in 1986 from sodium normal propyl xanthate to the weaker sodium ethyl xanthate. The pulp densities in the copper-cleaner circuit were reduced significantly, and the reagent feeding systems were redesigned. The pH value of slimes-dam return water was increased from 7 to 9 by means of further additions of lime, thereby reducing the recirculation of soluble salts to the flotation plant.

Later Flotation Practice

Late in December 1987, the separation of copper and zinc from underground ore was so bad that it seemed likely the mine would have to close. Copper concentrates containing 20 per cent copper and 20 per cent zinc were routinely being produced, and the production staff were becoming frustrated at the apparent futility of the numerous process changes being tried. As a last resort, at the end of December 1987, a sodium cyanide/zinc sulphate test was undertaken using Heath-Robinson equipment since the original cyanide-handling equipment had long since been dismantled.

In this test, sodium cyanide and zinc sulphate heptahydrate were added in the mass ratio of 1:3 to the inlet of the rod mill. Addition rates were set in accordance with the testwork carried out by AVRL except that, for safety's sake, lime was added to the rod mill to raise the pH to 9,5. This was done to avoid any possible evolution of HCN at the rod mill.

The initial plant-scale tests were completely unsuccessful, and despondence returned to the operators of the concentrator.

The common link in all the previous unsuccessful depressant tests at Prieska seemed to be the presence of lime and calcium ions in the depressant mixtures. The test was therefore repeated in exactly the same manner as the first test except that the addition of lime to the rod mill was stopped. Personnel working in the vicinity of the rod mill were required to wear gas masks.

This test was an astounding success, with the zinc content of the copper final concentrate being reduced to as low as 1 per cent on occasions from the previous 20 per cent level. It was found that the depression/deactivation of sphalerite was particularly effective in the three-stage copper cleaners. The test further confirmed AVRL predictions that, with depressants, all the sulphides floated more slowly. In fact, the first four copper-rougher cells practically stopped floating altogether. Separation is determined by relative rather than absolute flotation rates. The depression/deactivation process accentuates the difference in the flotation rates of chalcopyrite and sphalerite in the copper-flotation system, resulting in better separation. The emphasis then changes to maintaining the copper recovery by, for example, the use of stronger collectors. The fact that zinc levels of 1 per cent are achievable in the copper final concentrate indicates to us that the sphalerite is virtually completely depressed/deactivated and is carried over only by froth entrainment. In practice, 3 per cent zinc in the copper concentrate is the target, since attempts to achieve lower zinc contents by extra additions of depressants seriously affect the copper recovery and grade. The copper grade is affected negatively by the rate of flotation of galena relative to chalcopyrite, which increases as the extent of over-depression increases in the copper float.

The flotation process is, however, extremely sensitive to the feed rates of both zinc sulphate and sodium cyanide solutions. When the mass ratio of zinc sulphate heptahydrate to sodium cyanide dropped significantly below 3:1, depression/deactivation of sphalerite stopped. Ratios higher than 3:1 improved the flotation slightly, but the additional expense did not warrant ratios much higher than 3,5. Addition rates of zinc sulphate heptahydrate and sodium cyanide varied considerably, but were typically of the order of 390 to 510 g/t and 130 to 170 g/t respectively. In accordance with the AVRL testwork[9], we found in practice that a minimum dosage of depressant mixture is essential. This dosage is in the region of 100 g of NaCN and 300 g of $ZnSO_4 \cdot 7H_2O$ per tonne. Collector additions to the copper stage increased fourfold relative to those experienced in the previous system, where no depressant was used.

We found, during the initial stages of this investigation, that the separation of chalcopyrite and sphalerite in the copper-flotation process was extremely sensitive to choking on the feed systems of either the zinc sulphate or sodium cyanide reagent. For example, the zinc content of the copper concentrate increased by about 0,7 per cent per minute when choking on either reagent feeder was experienced. In such a situation, it took about 25 minutes for the zinc content of the copper concentrate to increase from about 3 to 20 per cent! The flotation efficiency was worse when the zinc sulphate feeder choked because the uncomplexed sodium cyanide completely depressed the copper flotation.

Urgent efforts were accordingly made during the months of January to March 1988 to design, install, and commission suitable non-choking systems for the preparation, storage, and feeding of cyanide and zinc sulphate solutions. These systems were all operating well by March 1988. On the odd occasions that later failures were experienced in the feed system, the quickest and most reliable indicator of any such failure was the Courier analyser trace of the zinc content of the copper concentrate.

Process Chemistry Background

It was apparent that a major process development had been achieved; however, it was equally apparent that there

was little understanding of the chemistry of the process. It is essential that the initial depressant conditioning of the ore should take place in the rod mill at a pH value of between 6, 8, and 8. Higher values, whether occurring naturally or induced by the addition of lime, result in unsatisfactory depression/deactivation of the sphalerite. Although the rod-mill effluent is conditioned with lime to pH 10,2 and further milled before flotation, this subsequent pH increase before flotation does not adversely affect the depression/deactivation process and, in fact, is essential.

Mintek was then approached to conduct some investigative work, and Drs Peter Harris and Mike Bryson put a considerable effort into determining the likely chemical species that would be present under typical Prieska rod-milling conditions. These conditions and the corresponding theoretical plots of chemical species are detailed respectively in Table V and in Figs. 2 and 3. It should be noted that the rod-mill pulps were assumed to be saturated with carbonates.

Fig. 2 shows the percentage of rod-mill depressant mixture present as soluble zinc or cyanide species at the upper concentration limits detailed in Table V, as the pH of the rod-mill pulp is changed. It is clear that very little soluble zinc or cyanide would be present in the rod mill under typical operation pH values of 6,8 to 8,0.

Fig. 3 shows the percentage of rod-mill depressant mixture present as various solid zinc precipitates at the upper concentration limits detailed in Table V, as the pH of the rod mill pulp is changed. It is quite clear that a basic zinc sulphate precipitate is present only within the effective depression/deactivation pH range experienced at Prieska.

TABLE V
TYPICAL ROD-MILL DEPRESSION/DEACTIVATION CONDITIONS IN EARLY 1988

Rod-mill variable	Typical value or operating range
pH of rod-mill effluent	6,8 to 8,0
pH of rod-mill dilution water	8,0 to 9,0
pH of depressant mixture	6,3 to 6,5
NaCN addition rate, g/t	130 to 170
$ZnSO_4 \cdot 7H_2O$ addition rate, g/t	390 to 510
Equivalent concentration of NaCN in mill*	0,0115 to 0,015
Mixing time of $ZnSO_4 \cdot 7H_2O$ and NaCN before addition to rod mill	≈4 seconds

*gmol per litre of solution

The relative proportions and types of depressant species present in the rod-mill pulps vary considerably with pH. More detailed accounts of the major thermodynamic aspects of depressant systems relevant to the flotation of sphalerite at Prieska are detailed by Marsicano *et al.*[5] and by Allison *et al.*[10], and are considered to be beyond the scope of this paper.

Unfortunately, the precise mechanism of depression/deactivation of sphalerite was still not known, and one particular question remained: Why does the depression/deactivation mechanism operate so effectively when primary rod milling is carried out at pH 6,8 to 8 and secondary pebble milling is at pH 10,2, yet depression/deactivation of the sphalerite is relatively unsuccessful when the

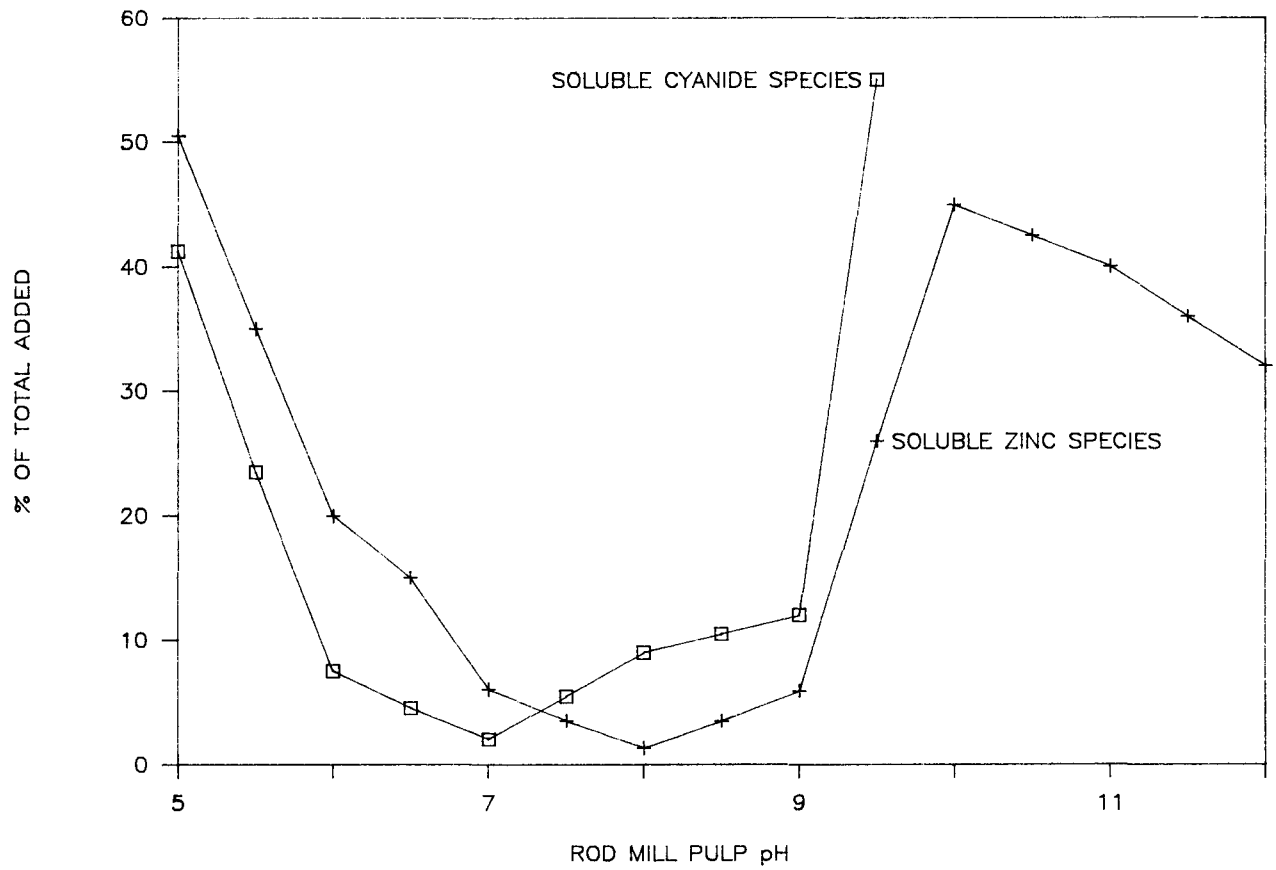

Fig. 2—Typical percentages of rod-mill depressant mixture present as soluble zinc or cyanide species

primary rod mill is operated at pH 9 or higher with the pebble mills at pH 10,2? The answer to this question is probably determined predominantly by the presence of basic zinc sulphates in the pH range 6,8 to 8; however, other mechanisms could apply.

One such possibility is that the depressant mixture, in addition to its normal function, acts as a dispersant in the highly viscous rod-mill pulps, thereby allowing better interaction of the depressant components. This action is assisted by the lower pH value experienced in the rod mill, and could be checked by the addition of a dispersant such as CMC in part replacement of the depressant.

A number of such tests followed and it was found that the addition rate of the depressant mixture could be reduced by about 10 per cent with the addition to the rod mill of 15 g/t of DLM 46, a carboxy methyl cellulose supplied by SA Mud Services. However, as the economics of the use of carboxy methyl cellulose is marginal, further work has been deferred.

Treatment of Waste Rock

In mid-1987, an abortive attempt was made to treat the 7 Mt waste dump which, though low grade and oxidized, could conceivably be used to supplement the decreasing tonnage from underground. The 2 kt plant test could not produce concentrate grades better than 21 per cent copper and 42 per cent zinc. This, of course, was without the use of depressants. Late in 1988, armed with a new flotation process, the mine returned to the dump problem, and a number of plant-scale tests were carried out exclusively on this material. At least 100 kt of waste-dump material had been processed on a test basis by January 1989. The reagent consumptions were slightly lower than for the normal oxidized ore from underground. Numerous refinements to the process have been required, and a further 30 kt test yielded the following results:

Overall copper head grade	0,22%
Overall zinc head grade	0,56%
Copper concentrate grade	28,6%
Zinc in copper concentrate	3%
Zinc concentrate grade	51,2%
Copper recovery	66%
Zinc recovery	74%.

These results were promising enough to warrant processing of the waste dump when underground mining operations were severely curtailed in June/July 1989.

Cost Trends

Having become inured to living with high inflation rates and rising costs, we were surprised to find that the plant production costs, in real terms, had come down by 50 per cent over the life of the mine. Equally enlightening was the discovery that this downward trend had been noted and documented in many manufacturing industries to the extent that it is now widely known as the *Experience Effect.*

The Experience Effect is more formally defined in the Addendum, but works roughly as follows. Successful business organizations improve with age: they acquire new technology, more effective management methods, better labour

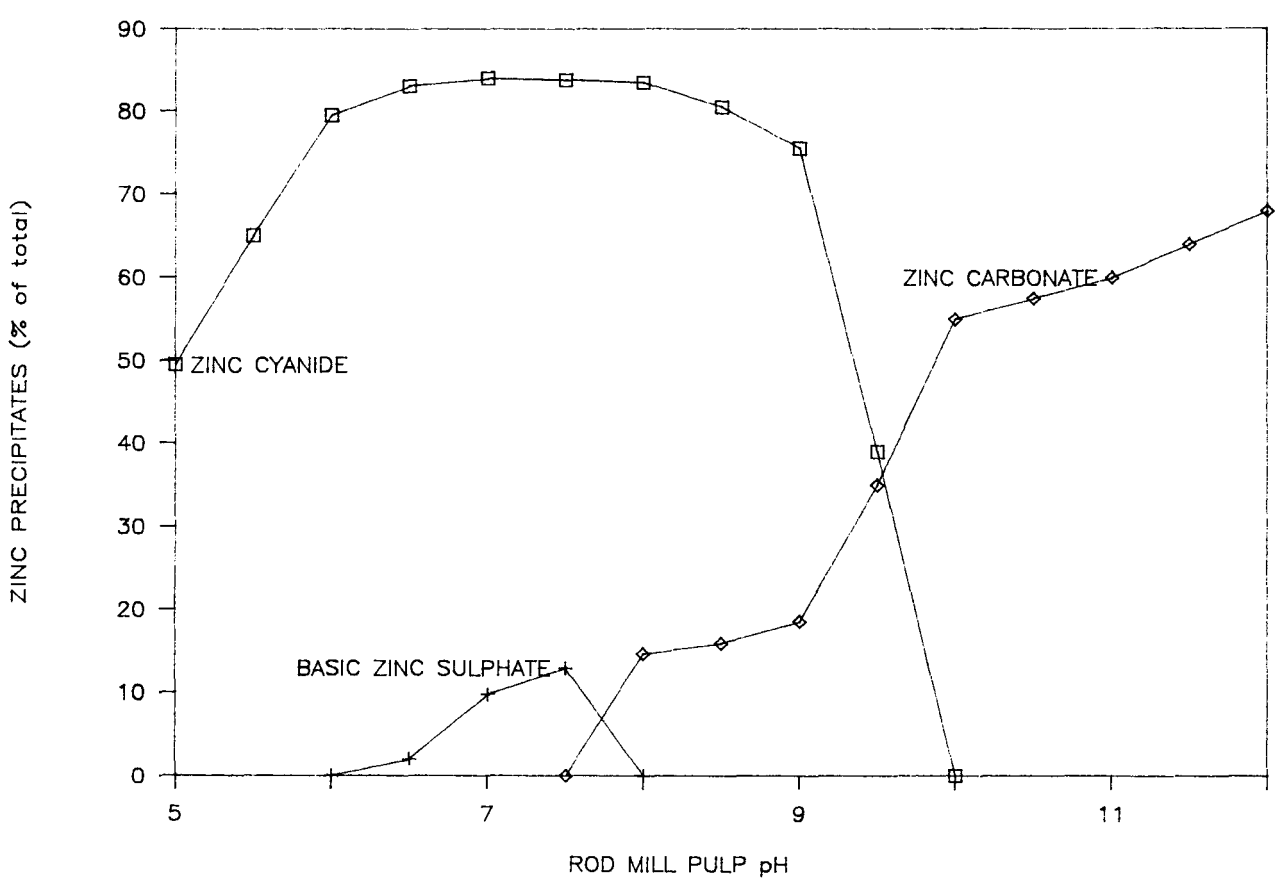

Fig. 3—Typical percentages of rod-mill depressant mixture present as solid zinc precipitates

relations, and a host of other factors that force down production costs. The Experience Effect is based on the observation that the downward cost trend, plotted against cumulative production, is a smooth curve (or a series of smooth curves), each characterized by a single constant, lambda, which is easily determined by curve-fitting techniques.

We feel that the Experience Effect is important enough to merit the following comments.

- We see no reason why the Experience Effect should not apply in mining as in industry.
- The Experience Effect will operate to some extent without anyone being aware of it, if only from advances in outside technology (for example Prieska benefited from computer developments). However, it is in a mine's interest to monitor and control the effect.
- From the mathematical definition, it follows that, if parameter lambda remains unchanged, i.e. if the mine stays on a single curve, sooner or later the costs will steady out. This state of affairs is known as the mature phase.
- At this point, unless some drastic change such as new technology is introduced, the company starts losing to competitors who are still on a descending cost curve.

We would argue that the South African gold industry, with its enormous cumulative production, is well into a mature phase, where experience-based cost reductions are becoming negligible. In fact, costs are rising at an alarming rate, and the logical way to shift to a steeper curve would be by investment in radically new technology.

References

1. REAR, B.J. The influence of dilution and total sulphide content of the plant feed on milling and flotation performance. Anglovaal Limited, Internal Report, 1981. pp. 1–35.
2. DE KOK, S.K. Differential flotation of copper–zinc at Prieska Copper Mines (Pty) Limited: A preliminary report. *J. S.Afr. Inst. Min. Metall.*, Jul. 1972. pp. 305–319.
3. MARAIS, P. Some practical considerations in the design and operation of a plant for the differential flotation of mixed sulphides, especially copper and zinc. *J. S.Afr. Inst. Min. Metall.*, vol. 80. Nov. 1980. pp. 385–394.
4. STEWART, B.V., GOOLD, L.A., and MARSICANO, F. Deactivation of copper-activated sphalerite with cyanide. National Institute for Metallurgy, *Report* 1613. 1974. pp. 1–28.
5. MARSICANO, F., HARRIS, P.J., MCDOUGALL, G.M., and FINKELSTEIN, N.P. Some thermodynamic aspects of systems relevant to the flotation of sphalerite. *Ibid., Report* 1785. May 1976. pp. 1–61.
6. HARRIS, P.J., and MARSICANO, F. A preliminary investigation into the mechanism of depression in the flotation of sulphide minerals at the Prieska Copper Mine. *Ibid., Report* 1721, Jun. 1975, pp. 1–37.
7. FINKELSTEIN, N.P., and ALLISON, S.A. *Flotation: A.M. Gaudin memorial volume.* Fuerstenau, M.C. (ed.). AIME. vol. 1, pp. 414–457.
8. HEATHCOTE, C.R. A fundamental investigation into the flotation behaviour of Prieska Copper Mine ore, with respect to the action of various depressant and collector levels on copper/zinc separation. Anglovaal Research Laboratory, *Report* PCM/36, 1983. pp. 1–89.
9. VAN DER ZON, C.P.M. The use of zinc sulphate/sodium cyanide as a depressant of sphalerite for copper/zinc separation in the flotation of highly oxidised Prieska Copper Mine dump material, Anglovaal Research Laboratory, *Report* PCM. 44/2, 1987. pp. 1–101.
10. ALLISON, S.A., HARRIS, P.J., and MARSICANO, F. The depression and deactivation of sphalerite. *J. S.Afr. Inst. Min. Metall.*, Oct. 1975. pp. 123–124.

Acknowledgements

The authors gratefully acknowledge the extensive contributions of Mr C.R. Heathcote and his staff at AVRL. This paper is presented by permission of Prieska Copper Mines (Pty) Limited and Anglovaal Limited.

Publisher's Note

Subsequent to the Colloquium, the Prieska Copper Mine ceased operation on 25th January, 1991. A demolition and rehabilitation programme has been implemented. Closure is expected to be completed by the end of 1991.

Addendum: The Experience Curve

Experience-curve effects[A1,A2] exist in numerous industries, and this led to the definition of the experience effect in the following generalized equation[A3]:

$$C_t = C_{t-1}\,[V_{t-1}]^{-\lambda},$$

where

V_t = the experience, cumulative production, to date

V_{t-1} = the experience, cumulative production, at an earlier specified date

C_t = the present cost of a unit, adjusted for inflation

C_{t-1} = the previous cost of a unit at the earlier specified date, adjusted for inflation

λ = lambda, an exponent characteristic of the experience rate.

In simple terms[A4], the ratio of experience at one point in time to another earlier point, V_t/V_{t-1}, leads to a cost reduction in the ratio C_t/C_{t-1} dependent on the value of the exponent, λ. For a given exponent, λ, the relative cost reduction is the same when the cumulative production is doubled from 100 000 to 200 000 units, as when going from 1000 to 2000 units.

Fig. A1 depicts the experience curves that applied at the Prieska concentrator. It indicates the experience curves for the Prieska concentrator, as well as the actual annual working costs, as cumulative production was achieved. All the costs were deflated by use of the South African producer price index. The production period shown represents the period during which both plant units at the concentrator were utilized.

For simplicity, two experience curves are shown for the concentrator in Fig. A1. In the first, with $\lambda = 0{,}18$, the real working costs were being reduced by 12 per cent with each doubling of the cumulative production. In later years, where λ equalled 0,45, the real working costs were being reduced by 27 per cent with each doubling of the cumulative production.

The true experience curve for the Prieska plant is actually a set of curves, each with a different value for λ. The different values of λ would represent the effect of improved 'experience', be it managerial, technological, methodological, or other. It is important to stress that the slope of the Prieska experience curve shown in Fig. A2 reduces as the

cumulative production accrues. This implies that, with time and therefore with additional production, the absolute reduction in real costs is continually decreasing to the point where virtually no real cost reductions are achieved. At that point, the operation has reached maturity, and the only way costs will be reduced significantly is by radical changes in the technological or managerial approach.

References

A1. THE BOSTON CONSULTING GROUP. *Perspectives on experience.* London, 1972.

A2. HEDLEY, B. A fundamental approach to strategy development. *Long range planning.* Dec. 1976. pp. 2–11.

A3. ABELL, D.F., and HAMMOND, J.S. *Strategic market planning.* Englewood Cliffs (USA), Prentice-Hall, 1979. pp. 107–109.

A4. ROBINSON, F.G. Experience curves as a planning tool. *S. Afr. J. Bus. Mgmt,* vol. 13, no. 3. 1982. pp. 101–112.

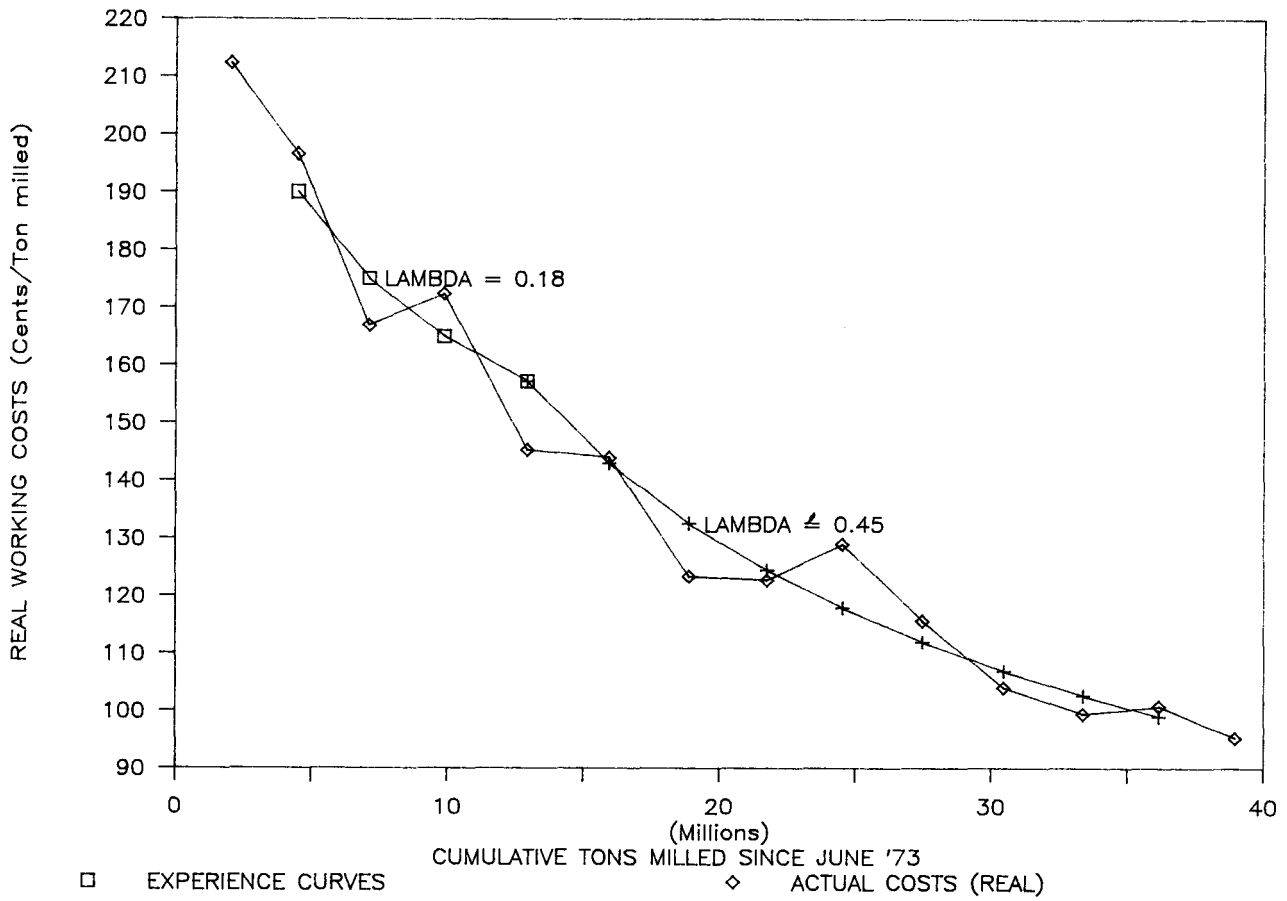

Fig. A1—Experience curves for the Prieska plant (all costs are in 1973/4 real terms)

Energy efficiency

Sponsored and organized jointly by the Institute of Metals and the Energy Efficiency Office for the Department of Energy, a conference on 'Profiting from Better Energy Efficiency in the Metals Industry' will be held on 6th September, 1991, at Metropole Hotel, Birmingham, in association with *Metals Engineering' '91.*

Intended to provide an assessment of productivity and energy, software and hardware for energy processes, and computer aid for energy operations, the Conference will open with a review of the Government's Best Practice Programme, which has been in operation for two years, and its various achievements in the metals field, before progressing onto the main theme – *that better process productivity automatically brings valuable energy savings.*

Although operating batch processors at very high temperatures is the most spectacular focus of this truism, it applies in virtually every production business, and this will be illustrated by examples of diverse projects from the Best Practice Programme and elsewhere. In addition, there will be descriptions of effective expert systems designed to learn from best practices and to apply them consistently.

The three technical sections will cover

- Productivity and Energy
- Software for Energy Processes
- Hardware for Energy Processes
- Computer Aid for Energy Operations.

Further details, including the full technical programme and registration form, are available from:

Mrs H. Granger
The Institute of Metals, Conference Department
1 Carlton House Terrace.
London SW1Y 5DB.
Tel: 071-839 4071; Fax: 071-839 3576.